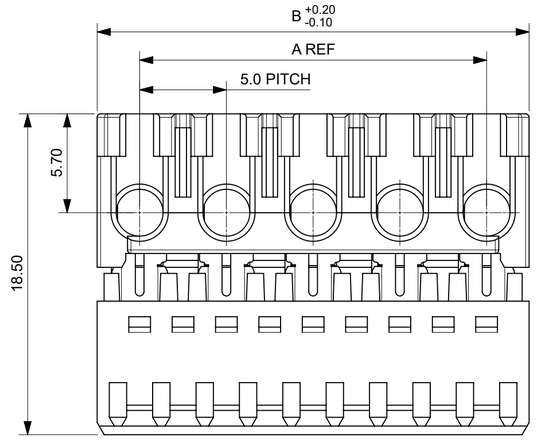

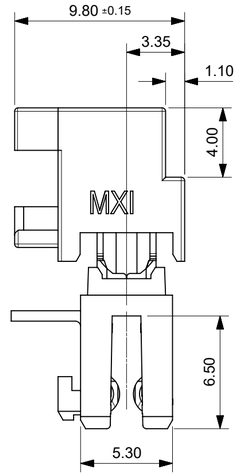

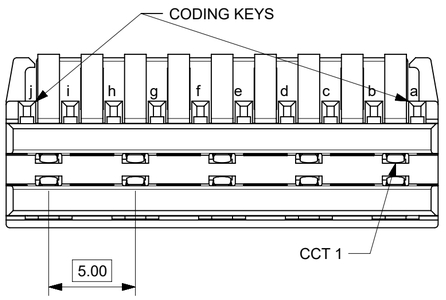

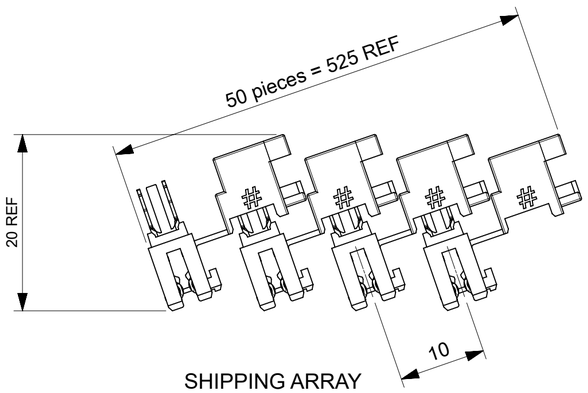

SHIPPING ARRAY

SURFACE FOR
COLCUR STRIPE
SEE NOTE 8

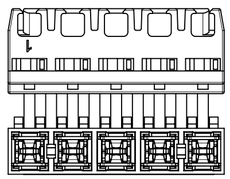

FULL LATCH

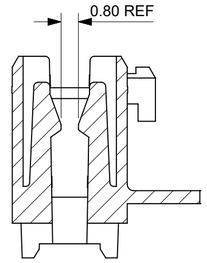

HALF LATCH

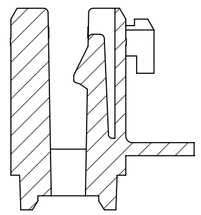

*SEE NOTE 6 FOR LATCHING INFORMATION

ADDITIONAL OPTIONS

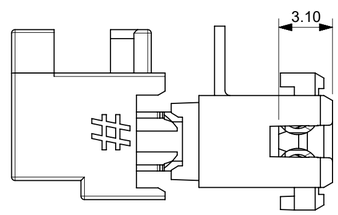

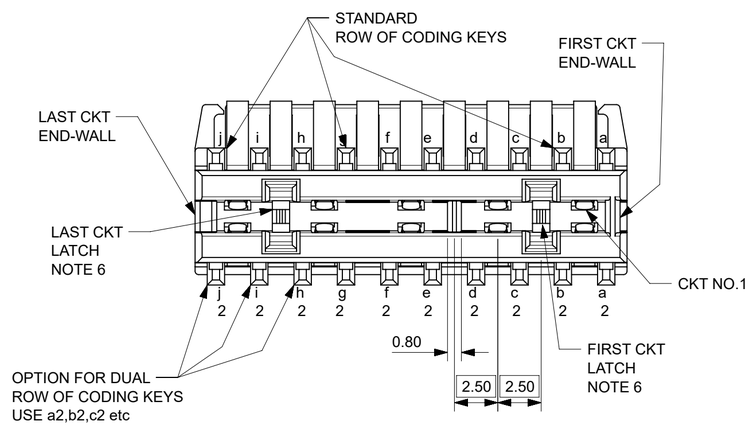

CKT	DIM A	DIM B	DIM C	DIM D
2	5	9.9	7.3	-
3	10	14.9	12.3	5
4	15	19.9	17.3	10
5	20	24.9	22.3	15
6	25	29.9	27.3	20
7	30	34.9	32.3	25
8	35	39.9	37.3	30
9	40	44.9	42.3	35
10	45	49.9	47.3	40
11	50	54.9	52.3	45
12	55	59.9	57.3	50

NOTES:
1. MATERIAL: HOUSING: PA 6
   TERMINAL:PHOSPHOR BRONZE OR COPPER ALLOY
   PLATING: TIN(6A) OR SILVER(10A)
2. PRODUCT SPECIFICATION: 916270001 PS
3. SEE SUBSEQUENT SHEETS FOR PART NUMBERING INFORMATION
4. LATCHES RECOMMENDED WHERE LOCKING VIA HEADER, GUIDEFRAME OR COMPONENT ENCLOSURE IS NOT POSSIBLE.
5. APPLICATION SPECIFICATION: 916270001 AS
6. 2 CCT OPTIONS WITH LATCH WILL HAVE HALF LATCH ONLY
   3CCT OPTIONS WITH 2 LATCHES WILL HAVE HALF LATCH
   BETWEEN CCTS 1&2 AND FULL LATCH BETWEEN CCTS 2&3
7. PACKAGING SPECIFICATION: 916270001 PK
8. COLOUR STRIPE IS OPTIONAL.
   AVAILABLE IN THE FOLLOWING COLOURS; BLUE, RED, GREEN & BLACK.
   ASTERIX IN CHART INDICATES FULL SURFACE COVERAGE.

DOCUMENT STATUS	P1	RELEASE DATE	2024/04/12 15:13:28

THIS DRAWING CONTAINS INFORMATION THAT IS PROPRIETARY TO MOLEX ELECTRONIC TECHNOLOGIES, LLC AND SHOULD NOT BE USED WITHOUT WRITTEN PERMISSION

DIMENSION UNITS	SCALE
mm	10:1

GENERAL TOLERANCES (UNLESS SPECIFIED)

ANGULAR TOL	±	2.0 °
4 PLACES	±	
3 PLACES	±	
2 PLACES	±	0.1
1 PLACE	±	0.2
0 PLACES	±	

DRAFT WHERE APPLICABLE MUST REMAIN WITHIN DIMENSIONS

CURRENT REV DESC: 4 NEW PART NUMBERS CREATED IN SHEET NO. 9

EC NO: 783013
DRWN: GOPIS 2024/03/07
CHK'D: RAHULH3 2024/04/12
APPR: MRAMAKRISHNA 2024/04/12
INITIAL REVISION:
DRWN: CFISHER01 2018/01/03
APPR: BRUTTLE 2018/02/07

THIRD ANGLE PROJECTION | DRAWING: A2-SIZE | SERIES: 91627

molex

RAST PWR IDT CONN 5MM PITCH

PRODUCT CUSTOMER DRAWING

DOCUMENT NUMBER	DOC TYPE	DOC PART	REVISION
916270001	PSD	000	H2

MATERIAL NUMBER	CUSTOMER	SHEET NUMBER
SEE TABLES	GENERAL MARKET	1 OF 11

FORMAT: Generic-Grid-A2
REVISION: 1.0
DATE: 2018/01/17

SINGLE ROW CODING KEYS OPEN
END WALLS WITH LATCHES

END WALLS OPEN	
FIRST END WALL	LAST END WALL
OPEN	OPEN

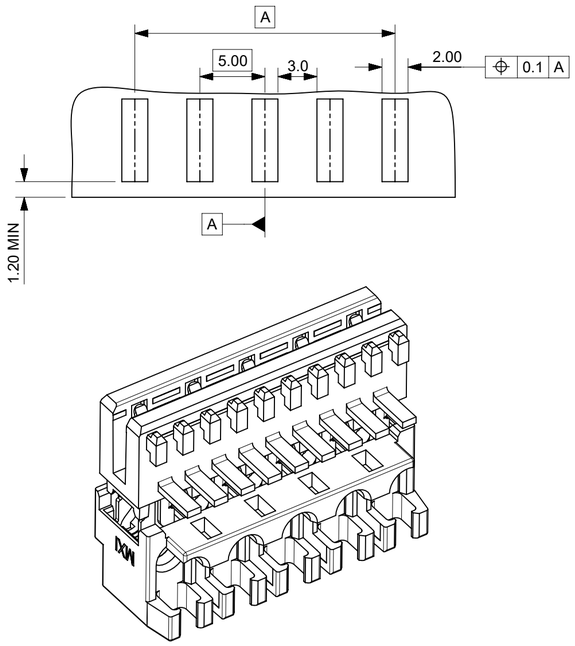

SINGLE ROW CODING KEYS OPTION A
END WALLS WITH LATCHES AND
POLARIZING RIBS

OPTION A END WALLS	
FIRST END WALL	LAST END WALL
SHORT THIN	LONG THICK

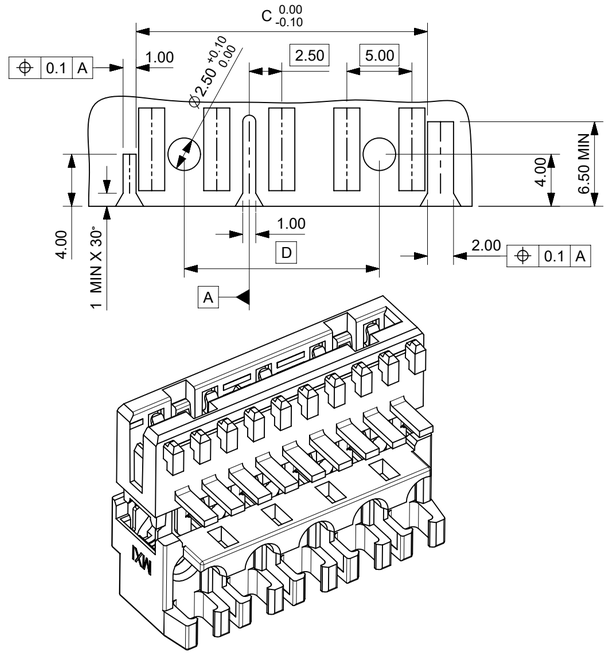

2 ROW CODING KEYS OPTION B
END WALLS WITH LATCHES AND
POLARIZING RIBS

OPTION B END WALLS	
FIRST END WALL	LAST END WALL
LONG THIN	SHORT THICK

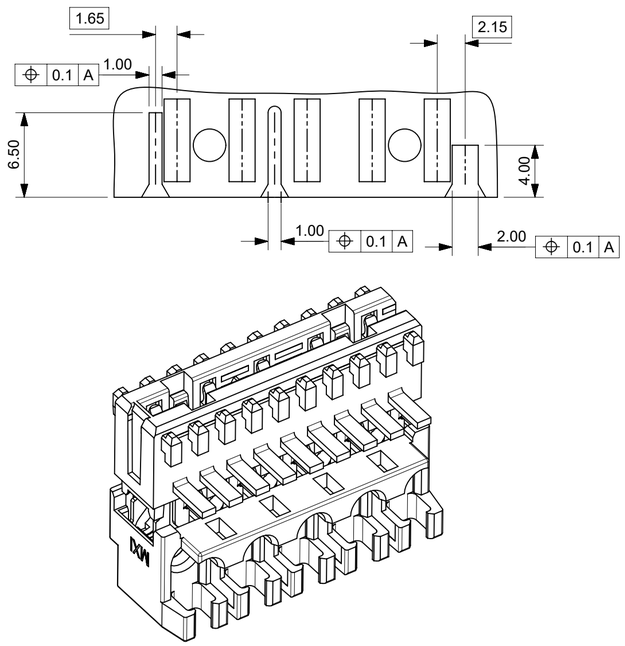

1 ROW CODING KEYS OPTION C
END WALLS WITH LATCHES AND
POLARIZING RIBS

OPTION C END WALLS	
FIRST END WALL	LAST END WALL
OPEN	LONG THICK

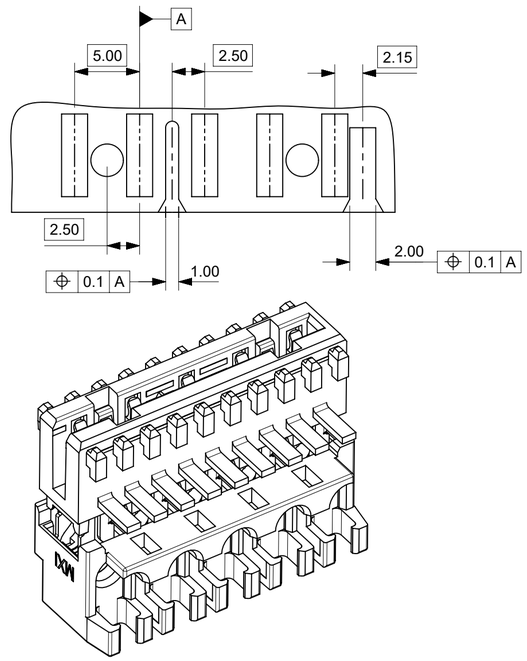

1 ROW CODING KEYS OPTION D
END WALLS WITH LATCHES AND
POLARIZING RIBS

OPTION G END WALLS	
FIRST END WALL	LAST END WALL
LONG THICK	OPEN

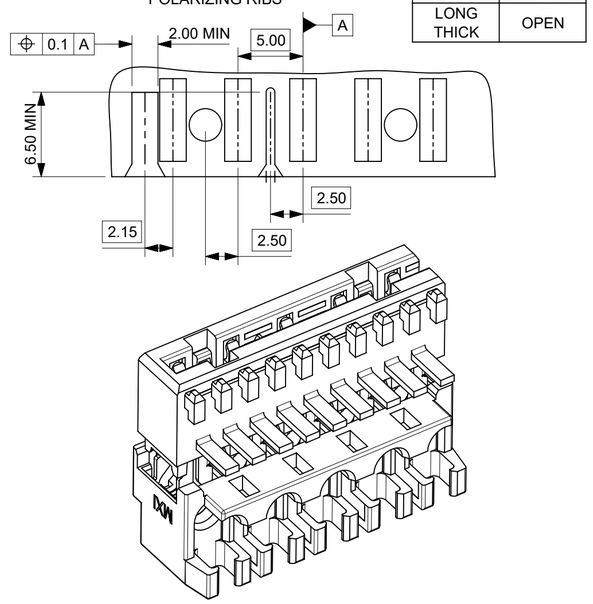

1 ROW CODING KEYS OPTION E
END WALLS WITH LATCHES AND
POLARIZING RIBS

OPTION E END WALLS	
FIRST END WALL	LAST END WALL
LONG THICK	LONG THICK

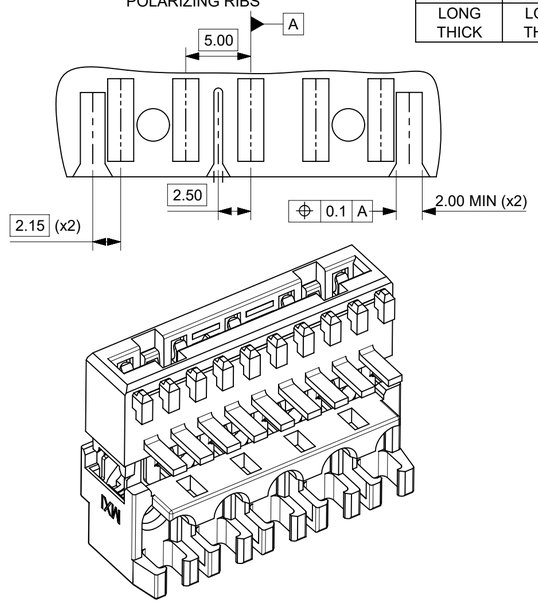

1 ROW CODING KEYS OPTION F
END WALLS WITH LATCHES

OPTION F END WALLS	
FIRST END WALL	LAST END WALL
SHORT THIN	SHORT THIN

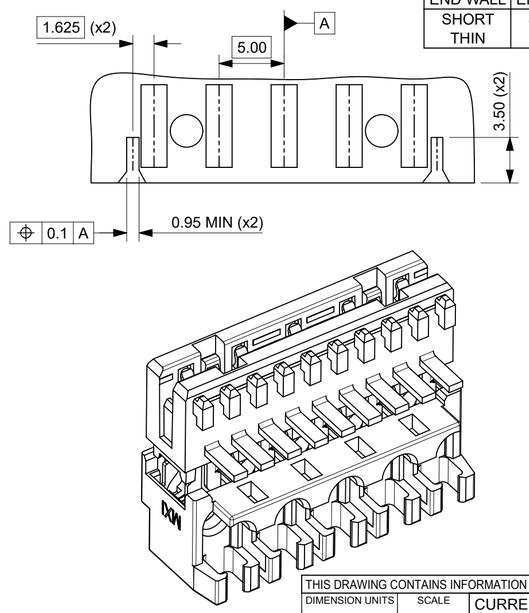

1 ROW CODING KEYS OPTION G
END WALLS WITH LATCHES

OPTION G END WALLS	
FIRST END WALL	LAST END WALL
LONG THIN	LONG THIN

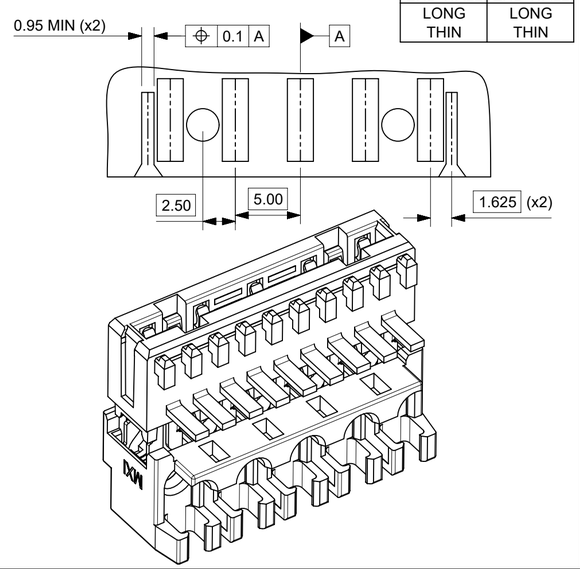

Other combinations possible:
There may be one or two latches which can be positioned between 1st and 2nd ckt and/or between 2nd and last ckt.
The polarizing rib can be between any ckt.
There may be one end wall only which must be located at the larger ckt end as polarized option A (wider and taller end wall)

THIS DRAWING CONTAINS INFORMATION THAT IS PROPRIETARY TO MOLEX ELECTRONIC TECHNOLOGIES, LLC AND SHOULD NOT BE USED WITHOUT WRITTEN PERMISSION

DIMENSION UNITS	SCALE
mm	10:1

GENERAL TOLERANCES (UNLESS SPECIFIED)

ANGULAR TOL	±	2.0 °
4 PLACES	±	
3 PLACES	±	
2 PLACES	±	0.1
1 PLACE	±	0.2
0 PLACES	±	

DRAFT WHERE APPLICABLE MUST REMAIN WITHIN DIMENSIONS

CURRENT REV DESC: 4 NEW PART NUMBERS CREATED IN SHEET NO. 9

EC NO: 783013
DRWN: GOPIS 2024/03/07
CHK'D: RAHULH3 2024/04/12
APPR: MRAMAKRISHNA 2024/04/12

INITIAL REVISION:
DRWN: CFISHER01 2018/01/03
APPR: BRUTTLE 2018/02/07

THIRD ANGLE PROJECTION | DRAWING: A2-SIZE | SERIES: 91627

molex

RAST PWR IDT CONN 5MM PITCH

PRODUCT CUSTOMER DRAWING

DOCUMENT NUMBER	DOC TYPE	DOC PART	REVISION
916270001	PSD	000	H2

MATERIAL NUMBER	CUSTOMER	SHEET NUMBER
SEE TABLES	GENERAL MARKET	2 OF 11

DOCUMENT STATUS	P1	RELEASE DATE	2024/04/12 15:13:28

FORMAT: 91627-Grid-A2
REVISION: 1.0
DATE: 2018/02/07

1 ROW CODING KEYS OPTION H
END WALLS WITHOUT LATCHES

OPTION H END WALLS	
FIRST END WALL	LAST END WALL
LONG & THICK	LONG & THIN

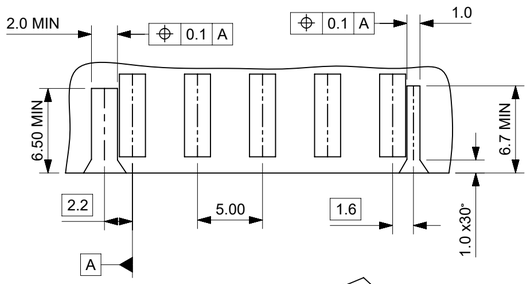

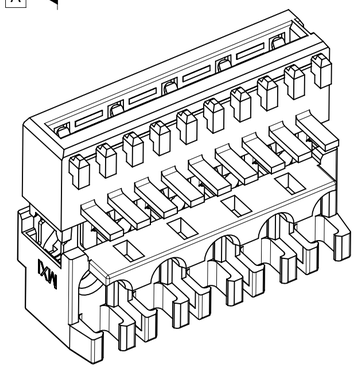

1 ROW CODING KEYS OPTION J
END WALLS WITHOUT LATCHES

OPTION J END WALLS	
FIRST END WALL	LAST END WALL
LONG & THIN FLUSH OUTSIDE	LONG & THIN FLUSH OUTSIDE

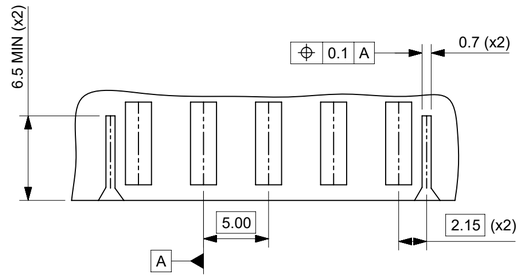

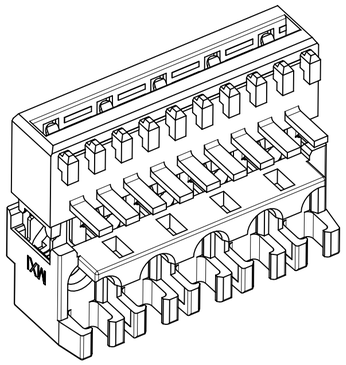

1 ROW CODING KEYS OPTION K
END WALLS WITHOUT LATCHES

OPTION K END WALLS	
FIRST END WALL	LAST END WALL
1.5mm HIGH	LONG & THIN FLUSH OUTSIDE

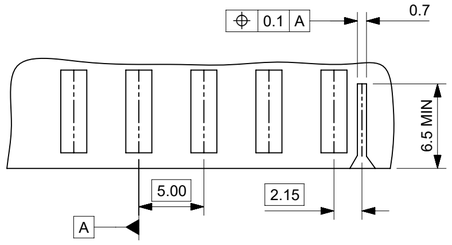

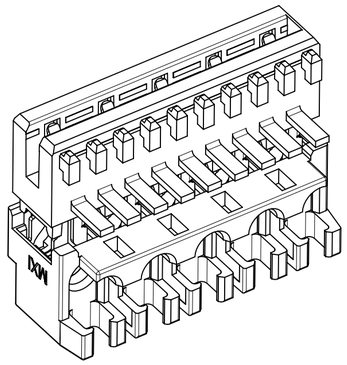

1 ROW CODING KEYS OPTION L
END WALLS WITHOUT LATCHES

OPTION L END WALLS	
FIRST END WALL	LAST END WALL
LONG & THIN FLUSH OUTSIDE	1.5mm HIGH

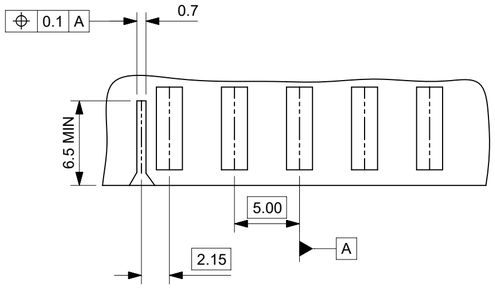

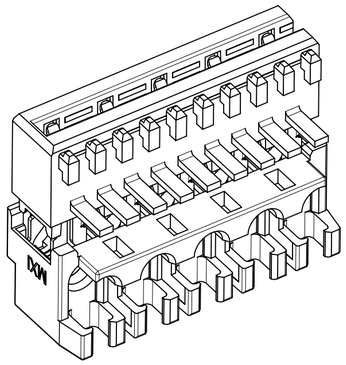

1 ROW CODING KEYS OPTION M
END WALLS WITH LATCHES & RIB 3/4

OPTION M END WALLS	
FIRST END WALL	LAST END WALL
1.5mm HIGH	1.5mm HIGH

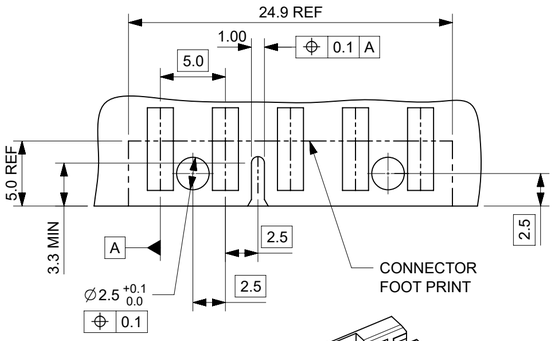

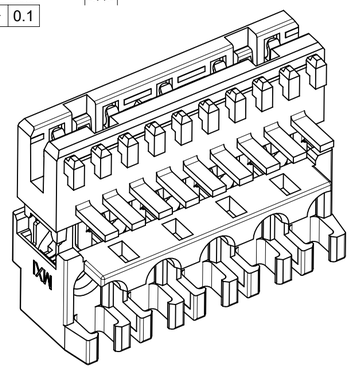

Other combinations possible:
There may be one or two latches which can be positioned between
1st and 2nd ckt and/or between 2nd and last ckt.
The polarizing rib can be between any ckt.

DOCUMENT STATUS	P1	RELEASE DATE	2024/04/12 15:13:28

THIS DRAWING CONTAINS INFORMATION THAT IS PROPRIETARY TO MOLEX ELECTRONIC TECHNOLOGIES, LLC AND SHOULD NOT BE USED WITHOUT WRITTEN PERMISSION

DIMENSION UNITS	SCALE
mm	10:1

GENERAL TOLERANCES (UNLESS SPECIFIED)

ANGULAR TOL	±	2.0 °
4 PLACES	±	
3 PLACES	±	
2 PLACES	±	0.1
1 PLACE	±	0.2
0 PLACES	±	

DRAFT WHERE APPLICABLE MUST REMAIN WITHIN DIMENSIONS

CURRENT REV DESC: 4 NEW PART NUMBERS CREATED IN SHEET NO. 9

EC NO: 783013
DRWN: GOPIS 2024/03/07
CHK'D: RAHULH3 2024/04/12
APPR: MRAMAKRISHNA 2024/04/12

INITIAL REVISION:
DRWN: CFISHER01 2018/01/03
APPR: BRUTTLE 2018/02/07

THIRD ANGLE PROJECTION | DRAWING: A2-SIZE | SERIES: 91627

molex

RAST PWR IDT CONN 5MM PITCH

PRODUCT CUSTOMER DRAWING

DOCUMENT NUMBER	DOC TYPE	DOC PART	REVISION
916270001	PSD	000	H2

MATERIAL NUMBER	CUSTOMER	SHEET NUMBER
SEE TABLES	GENERAL MARKET	3 OF 11

FORMAT: 987654-mod-A2
REVISION: 1
DATE: 2018/01/04

2 CIRCUIT

MOLEX PART NO.	MOLEX HOUSING NO.	TERMINAL VOID POSITION	REMOVED CODING KEYS	CONFIGURATION	LATCH BETWEEN	POLARIZING RIB BETWEEN	FIRST ENDWALL	LAST ENDWALL	COLOUR STRIPE
91627-0001	91626-0002	NONE	NONE		NONE	NONE	OPEN	OPEN	NONE
91627-0501	91690-2002	NONE	NONE		CCT 1&2	NONE	OPEN	OPEN	NONE
91627-0502	91690-2022	NONE	NONE		CCT 1&2	NONE	SHORT THIN	LONG THICK	NONE
91627-0002	91626-0002	NONE	NONE		NONE	NONE	OPEN	OPEN	YELLOW
91627-0003	91626-0002	NONE	d		NONE	NONE	OPEN	OPEN	YELLOW
91627-0004	91626-0002	NONE	NONE		NONE	NONE	OPEN	OPEN	RED
91627-0005	91626-0002	NONE	b		NONE	NONE	OPEN	OPEN	RED
91627-0006	91626-0002	NONE	d		NONE	NONE	OPEN	OPEN	NONE
91627-0008	91626-0002	NONE	c		NONE	NONE	OPEN	OPEN	NONE
91627-0009	91626-0002	NONE	a b		NONE	NONE	OPEN	OPEN	NONE
91627-0010	91626-0002	NONE	a c		NONE	NONE	OPEN	OPEN	NONE
91627-0503	91690-2042	NONE	NONE		CCT 1&2	NONE	LONG THIN	SHORT THICK	NONE
91627-0011	91626-0002	NONE	b d		NONE	NONE	OPEN	OPEN	NONE
91627-0012	91626-0002	NONE	a b c		NONE	NONE	OPEN	OPEN	NONE
91627-0013	91626-0002	NONE	a c d		NONE	NONE	OPEN	OPEN	NONE
91627-0014	91626-0002	NONE	b c d		NONE	NONE	OPEN	OPEN	NONE
91627-0015	91626-0002	NONE	b		NONE	NONE	OPEN	OPEN	NONE
91627-0504	91690-2022	NONE	a b		CCT 1&2	NONE	SHORT THIN	LONG THICK	NONE
91627-0505	91690-2022	NONE	a c		CCT 1&2	NONE	SHORT THIN	LONG THICK	NONE
91627-0506	91690-2022	NONE	c d		CCT 1&2	NONE	SHORT THIN	LONG THICK	NONE
91627-0016	91626-0002	NONE	b c		NONE	NONE	OPEN	OPEN	NONE
91627-0508	91690-2022	NONE	b d		CCT 1&2	NONE	SHORT THIN	LONG THICK	NONE
91627-0017	91626-0082	NONE	b c		NONE	NONE	LONG THICK	OPEN	NONE
91627-0018	91626-0082	NONE	NONE		NONE	NONE	LONG THICK	OPEN	NONE
91627-0019	91626-0062	NONE	NONE		NONE	NONE	OPEN	LONG THICK	NONE
91627-0020	91626-0002	NONE	b c		NONE	NONE	OPEN	OPEN	BLACK
91627-0021	91626-0002	NONE	c d		NONE	NONE	OPEN	OPEN	BLUE
91627-0022	91626-0062	NONE	a b		NONE	NONE	OPEN	LONG THICK	RED
91627-0023	91626-0002	NONE	c d		NONE	NONE	OPEN	OPEN	NONE
91627-0024	91626-0002	NONE	a		NONE	NONE	OPEN	OPEN	NONE

2 CIRCUIT

MOLEX PART NO.	MOLEX HOUSING NO.	TERMINAL VOID POSITION	REMOVED CODING KEYS	CONFIGURATION	LATCH BETWEEN	POLARIZING RIB BETWEEN	FIRST ENDWALL	LAST ENDWALL	COLOUR STRIPE
91627-0025	91626-0082	NONE	a c		NONE	NONE	LONG THICK	OPEN	YELLOW
91627-0027	91626-0082	NONE	d		NONE	NONE	LONG THICK	OPEN	NONE
91627-0028	91690-2062	NONE	NONE		CCT 1&2	NONE	OPEN	LONG THICK	NONE
91627-0029	91626-0002	NONE	a d		NONE	NONE	OPEN	OPEN	NONE
91627-0030	91626-0102	NONE	NONE		NONE	CCT 1&2	OPEN	OPEN	NONE
91627-0509	91690-2082	NONE	NONE		CCT 1&2	NONE	LONG THICK	OPEN	BLUE
91627-0031	91626-0002	NONE	NONE		NONE	NONE	OPEN	OPEN	BLUE
91627-0032	91626-0062	NONE	b c d		NONE	NONE	OPEN	LONG THICK	NONE
91627-0033	91626-0082	NONE	a b c		NONE	NONE	LONG THICK	OPEN	NONE
91627-0035	91626-0002	NONE	a b c d		NONE	NONE	OPEN	OPEN	NONE
91627-0036	91690-2013	NONE	a b c d		CCT 1&2	NONE	LONG THICK	LONG THICK	NONE
91627-0037	91626-0102	NONE	a d		NONE	CCT 1&2	OPEN	OPEN	NONE
91627-0038	91690-2042	NONE	a b c d		CCT 1&2	NONE	LONG THIN	SHORT THICK	NONE
91627-0039	91626-0002	NONE	a b		NONE	NONE	OPEN	OPEN	RED
91627-0040	91626-0022	NONE	a b c d		NONE	NONE	SHORT THIN	LONG THICK	NONE
91627-0041	91690-2033	NONE	NONE		CCT 1&2	NONE	SHORT THIN	SHORT THIN	NONE
91627-0042	91690-2062	NONE	NONE		CCT 1&2	NONE	OPEN	LONG THICK	RED
91627-0043	91690-2013	NONE	NONE		CCT 1&2	NONE	LONG THICK	LONG THICK	BLACK
91627-0044	91690-2033	NONE	NONE		CCT 1&2	NONE	SHORT THIN	SHORT THIN	YELLOW
91627-0045	91690-2013	NONE	NONE		CCT 1&2	NONE	LONG THICK	LONG THICK	NONE
91627-0046	91626-2002	NONE	b d a2 b2 c2		NONE	NONE	OPEN	OPEN	NONE
91627-0047	91626-2002	NONE	a d b2 c2 d2		NONE	NONE	OPEN	OPEN	NONE
91627-0048	91626-2002	NONE	b d b2 c2 d2		NONE	NONE	OPEN	OPEN	NONE

THIS DRAWING CONTAINS INFORMATION THAT IS PROPRIETARY TO MOLEX ELECTRONIC TECHNOLOGIES, LLC AND SHOULD NOT BE USED WITHOUT WRITTEN PERMISSION

DIMENSION UNITS	SCALE
mm	1:1

GENERAL TOLERANCES (UNLESS SPECIFIED)

ANGULAR TOL	±	2.0 °
4 PLACES	±	
3 PLACES	±	
2 PLACES	±	0.1
1 PLACE	±	0.2
0 PLACES	±	

DRAFT WHERE APPLICABLE MUST REMAIN WITHIN DIMENSIONS

CURRENT REV DESC: 4 NEW PART NUMBERS CREATED IN SHEET NO. 9

EC NO: 783013
DRWN: GOPIS 2024/03/07
CHK'D: RAHULH3 2024/04/12
APPR: MRAMAKRISHNA 2024/04/12

INITIAL REVISION:
DRWN: CFISHER01 2018/01/03
APPR: BRUTTLE 2018/02/07

THIRD ANGLE PROJECTION | DRAWING: A2-SIZE | SERIES: 91627

molex

RAST PWR IDT CONN 5MM PITCH

PRODUCT CUSTOMER DRAWING

DOCUMENT NUMBER	DOC TYPE	DOC PART	REVISION
916270001	PSD	000	H2

MATERIAL NUMBER	CUSTOMER	SHEET NUMBER
SEE TABLES	GENERAL MARKET	4 OF 11

DOCUMENT STATUS	P1	RELEASE DATE	2024/04/12 15:13:28

FORMAT: 2011_molex_prod-A2
REVISION: 1.1
DATE: 2018/01/11

2 CIRCUIT

MOLEX PART NO.	MOLEX HOUSING NO.	TERMINAL VOID POSITION	REMOVED CODING KEYS	CONFIGURATION	LATCH BETWEEN	POLARIZING RIB BETWEEN	FIRST ENDWALL	LAST ENDWALL	COLOUR STRIPE
91627-0049	91626-2002	NONE	a b c b2 c2	a b c 1 2 b c 2 2	NONE	NONE	OPEN	OPEN	NONE
91627-0050	91626-2002	NONE	NONE	1 2	NONE	NONE	OPEN	OPEN	NONE
91627-0053	91636-0022	NONE	NONE	1 2	NONE	NONE	LONG THIN flush outside	LONG THIN flush outside	NONE
91627-0054	91636-0062	NONE	NONE	1 2	NONE	NONE	LONG THIN flush outside	1.5mm high	NONE
91627-0055	91690-2082	NONE	NONE	1 2	CCT 1&2	NONE	LONG THICK	OPEN	NONE
91627-0056	91690-2022	NONE	NONE	1 2	CCT 1&2	NONE	LONG THIN flush outside	LONG THIN flush outside	NONE

H2

3 CIRCUIT

MOLEX PART NO.	MOLEX HOUSING NO.	TERMINAL VOID POSITION	REMOVED CODING KEYS	CONFIGURATION	LATCH BETWEEN	POLARIZING RIB BETWEEN	FIRST ENDWALL	LAST ENDWALL	COLOUR STRIPE
91627-1001	91626-0003	NONE	NONE	1 2 3	NONE	NONE	OPEN	OPEN	NONE
91627-1501	91690-2003	NONE	NONE	1 2 3	CCT 1&2	NONE	OPEN	OPEN	NONE
91627-1002	91626-0103	NONE	a b c	a b c 1 2 3	NONE	CCT 1&2	OPEN	OPEN	RED
91627-1004	91626-0103	NONE	NONE	1 2 3	NONE	CCT 1&2	OPEN	OPEN	RED
91627-1005	91626-2003	NONE	a b c d e b2 c2 d2 e2	a b c d e 1 2 3 b c d e 2 2 2 2	NONE	NONE	OPEN	OPEN	NONE
91627-1006	91626-0003	NONE	b c e	b c e 1 2 3	NONE	NONE	OPEN	OPEN	NONE
91627-1007	91626-0003	NONE	d e f	d e f 1 2 3	NONE	NONE	OPEN	OPEN	NONE
91627-1502	91690-0023	NONE	NONE	1 2 3	CCT 1&2 CCT 2&3	NONE	SHORT THIN	LONG THICK	NONE
91627-1503	91690-2023	NONE	c d	c d 1 2 3	CCT 1&2	NONE	SHORT THIN	LONG THICK	NONE
91627-1504	91690-2203	NONE	a b c	a b c 1 2 3	CCT 1&2	CCT 2&3	OPEN	OPEN	RED
91627-1506	91690-4123	NONE	NONE	1 2 3	CCT 2&3	CCT 1&2	SHORT THIN	LONG THICK	NONE
91627-1507	91690-2223	NONE	NONE	1 2 3	CCT 1&2	CCT 2&3	SHORT THIN	LONG THICK	NONE
91627-1508	91690-4103	NONE	NONE	1 2 3	CCT 2&3	CCT 1&2	OPEN	OPEN	NONE
91627-1008	91626-0003	NONE	c d f	c d f 1 2 3	NONE	NONE	OPEN	OPEN	NONE
91627-1009	91626-0003	NONE	a d e	a d e 1 2 3	NONE	NONE	OPEN	OPEN	NONE
91627-1010	91626-0003	NONE	b c d	b c d 1 2 3	NONE	NONE	OPEN	OPEN	NONE
91627-1011	91626-0003	NONE	a d e f	a d e f 1 2 3	NONE	NONE	OPEN	OPEN	NONE
91627-1012	91626-0003	NONE	a b d	a b d 1 2 3	NONE	NONE	OPEN	OPEN	NONE
91627-1013	91626-0103	CCT 2	d e f	d e f 1 2 3	NONE	CCT 1&2	OPEN	OPEN	NONE
91627-1014	91626-0003	NONE	b c d e	b c d e 1 2 3	NONE	NONE	OPEN	OPEN	NONE
91627-1015	91626-0003	NONE	a c e	a c e 1 2 3	NONE	NONE	OPEN	OPEN	NONE
91627-1016	91626-0003	NONE	NONE	1 2 3	NONE	NONE	OPEN	OPEN	BLUE 2
91627-1017	91626-0103	NONE	d e f	d e f 1 2 3	NONE	CCT 1&2	OPEN	OPEN	NONE
91627-1018	91626-0063	NONE	c e	c e 1 2 3	NONE	NONE	OPEN	LONG THICK	NONE
91627-1019	91626-0063	NONE	b c e	b c e 1 2 3	NONE	NONE	OPEN	LONG THICK	NONE

THIS DRAWING CONTAINS INFORMATION THAT IS PROPRIETARY TO MOLEX ELECTRONIC TECHNOLOGIES, LLC AND SHOULD NOT BE USED WITHOUT WRITTEN PERMISSION

DIMENSION UNITS	SCALE
mm	1:1

GENERAL TOLERANCES (UNLESS SPECIFIED)

ANGULAR TOL	±	2.0 °
4 PLACES	±	
3 PLACES	±	
2 PLACES	±	0.1
1 PLACE	±	0.2
0 PLACES	±	

DRAFT WHERE APPLICABLE MUST REMAIN WITHIN DIMENSIONS

CURRENT REV DESC: 4 NEW PART NUMBERS CREATED IN SHEET NO. 9

EC NO: 783013
DRWN: GOPIS 2024/03/07
CHK'D: RAHULH3 2024/04/12
APPR: MRAMAKRISHNA 2024/04/12

INITIAL REVISION:
DRWN: CFISHER01 2018/01/03
APPR: BRUTTLE 2018/02/07

THIRD ANGLE PROJECTION | DRAWING: A2-SIZE | SERIES: 91627

molex

RAST PWR IDT CONN 5MM PITCH

PRODUCT CUSTOMER DRAWING

DOCUMENT NUMBER	DOC TYPE	DOC PART	REVISION
916270001	PSD	000	H2

MATERIAL NUMBER	CUSTOMER	SHEET NUMBER
SEE TABLES	GENERAL MARKET	5 OF 11

DOCUMENT STATUS	P1	RELEASE DATE	2024/04/12 15:13:28

FORMAT: 987654-prod-A2
REVISION: 1.1
DATE: 2018/01/17

3 CIRCUIT

MOLEX PART NO.	MOLEX HOUSING NO.	TERMINAL VOID POSITION	REMOVED CODING KEYS	CONFIGURATION	LATCH BETWEEN	POLARIZING RIB BETWEEN	FIRST ENDWALL	LAST ENDWALL	COLOUR STRIPE
91627-1022	91626-0063	NONE	NONE	1 2 3	NONE	NONE	OPEN	LONG THICK	NONE
91627-1024	91626-0003	NONE	b c d e	b c d e 1 2 3	NONE	NONE	OPEN	OPEN	BLACK
91627-1025	91626-0203	CCT 2	a	a 1 2 3	NONE	CCT 2&3	OPEN	OPEN	NONE
91627-1026	91626-0003	NONE	b c d f	b c d f 1 2 3	NONE	NONE	OPEN	OPEN	NONE
91627-1027	91626-0003	CCT 2	a	a 1 2 3	NONE	NONE	OPEN	OPEN	NONE
91627-1028	91626-0003	CCT 2	d	d 1 2 3	NONE	NONE	OPEN	OPEN	NONE
91627-1029	91626-0003	CCT 2	NONE	1 2 3	NONE	NONE	OPEN	OPEN	NONE
91627-1031	91626-0083	NONE	NONE	1 2 3	NONE	NONE	LONG THICK	OPEN	NONE
91627-1509	91690-4183	NONE	f	f 1 2 3	CCT 2&3	CCT 1&2	LONG THICK	OPEN	BLACK
91627-1032	91626-0003	NONE	c	c 1 2 3	NONE	NONE	OPEN	OPEN	NONE
91627-1033	91626-0003	NONE	e f	e f 1 2 3	NONE	NONE	OPEN	OPEN	NONE
91627-1034	91626-0003	NONE	a b	a b 1 2 3	NONE	NONE	OPEN	OPEN	NONE
91627-1035	91692-4103	NONE	NONE	1 2 3	CCT 2&3	CCT 1&2	LONG THICK	LONG THIN	NONE
91627-1510	91690-0023	NONE	a b c d e f	a b c d e f 1 2 3	CCT 1&2 CCT 2&3	NONE	SHORT THIN	LONG THICK	NONE
91627-1511	91960-2283	NONE	NONE	1 2 3	CCT 1&2	CCT 2&3	LONG THICK	OPEN	NONE
91627-1512	91960-0014	NONE	a b c d e f	a b c d e f 1 2 3	CCT 1&2 CCT 2&3	NONE	LONG THICK	LONG THICK	NONE
91627-1514	91626-0203	NONE	a b c d e f	a b c d e f 1 2 3	NONE	CCT 2&3	OPEN	OPEN	NONE
91627-1036	91626-0003	NONE	d	d 1 2 3	NONE	NONE	OPEN	OPEN	NONE
91627-1037	91626-0003	NONE	a d	a d 1 2 3	NONE	NONE	OPEN	OPEN	NONE
91627-1513	91690-0003	NONE	a b c d e f	a b c d e f 1 2 3	CCT 1&2 CCT 2&3	NONE	OPEN	OPEN	NONE
91627-1515	91690-4003	NONE	NONE	1 2 3	CCT 2&3	NONE	OPEN	OPEN	NONE
91627-1039	91626-0203	NONE	c	c 1 2 3	NONE	CCT 2&3	OPEN	OPEN	NONE
91627-1040	91626-0003	NONE	a b c d e f	a b c d e f 1 2 3	NONE	NONE	OPEN	OPEN	NONE
91627-1041	91626-0003	NONE	a b c f	a b c f 1 2 3	NONE	NONE	OPEN	OPEN	NONE
91627-1042	91626-0003	NONE	c d e f	c d e f 1 2 3	NONE	NONE	OPEN	OPEN	NONE
91627-1043	91626-0003	NONE	NONE	1 2 3	NONE	NONE	OPEN	OPEN	BLACK
91627-1044	91626-0183	NONE	NONE	1 2 3	NONE	CCT 1&2	LONG THICK	OPEN	NONE
91627-1045	91690-4183	NONE	NONE	1 2 3	CCT 2&3	CCT 1&2	LONG THICK	OPEN	NONE
91627-1046	91626-2003	NONE	b c d e f b2 c2 d2 e2	b c d e f 1 2 3 b c d e 2 2 2 2	NONE	NONE	OPEN	OPEN	NONE
91627-1047	91690-4163	NONE	NONE	1 2 3	CCT 2&3	CCT 1&2	OPEN	LONG THICK	NONE

3 CIRCUIT

MOLEX PART NO.	MOLEX HOUSING NO.	TERMINAL VOID POSITION	REMOVED CODING KEYS	CONFIGURATION	LATCH BETWEEN	POLARIZING RIB BETWEEN	FIRST ENDWALL	LAST ENDWALL	COLOUR STRIPE
91627-1048	91690-4083	NONE	NONE	1 2 3	CCT 2&3	NONE	LONG THICK	OPEN	NONE
91627-1049	91690-2223	NONE	a b c d e f	a b c d e f 1 2 3	CCT 1&2	CCT 2&3	SHORT THIN	LONG THICK	NONE
91627-1050	91626-0014	CCT 2	NONE	1 2 3	NONE	NONE	LONG THICK	LONG THICK	NONE
91627-1051	91636-0063	NONE	NONE	1 2 3	NONE	NONE	LONG THIN Flush on outside	1.5mm High	NONE
91627-1052	91636-0043	NONE	NONE	1 2 3	NONE	NONE	1.5mm High	LONG THIN Flush on outside	NONE
91627-1053	91636-0083	NONE	NONE	1 2 3	NONE	NONE	1.5mm High	1.5mm High	NONE
91627-1054	91636-0083	NONE	b c d e	b c d e 1 2 3	NONE	NONE	1.5mm High	1.5mm High	NONE
91627-1055	91690-4114	NONE	NONE	1 2 3	CCT 2&3	CCT 1&2	LONG THICK	LONG THICK	NONE
91627-1056	91626-0003	NONE	b e	b e 1 2 3	NONE	NONE	OPEN	OPEN	NONE
91627-1057	91690-2214	NONE	NONE	1 2 3	CCT 1&2	CCT 2&3	LONG THICK	LONG THICK	NONE
91627-1516	91690-2083	NONE	NONE	1 2 3	CCT 1&2	NONE	LONG THICK	OPEN	NONE
91627-1058	91626-0003	NONE	a c d f	a c d f 1 2 3	NONE	NONE	OPEN	OPEN	NONE
91627-1059	91626-0183	NONE	a f	a f 1 2 3	NONE	CCT 1&2	LONG THICK	OPEN	NONE
91627-1060	91690-2203	NONE	NONE	1 2 3	CCT 1&2	CCT 2&3	OPEN	OPEN	NONE
91627-1062	91626-0003	NONE	a b e f	a b e f 1 2 3	NONE	NONE	OPEN	OPEN	NONE
91627-1063	91626-0203	3	NONE	1 2 3	NONE	CCT 2&3	OPEN	OPEN	NONE
91627-1064	91626-0203	NONE	NONE	1 2 3	NONE	CCT 2&3	OPEN	OPEN	NONE
91627-1065	91690-0014	NONE	NONE	1 2 3	NONE	NONE	LONG THICK	LONG THICK	NONE
H2 91627-1066	91690-4183	CCT 2	NONE	1 2 3	CCT 2&3	CCT 1&2	LONG THICK	OPEN	NONE

DOCUMENT STATUS	P1	RELEASE DATE	2024/04/12 15:13:28

THIS DRAWING CONTAINS INFORMATION THAT IS PROPRIETARY TO MOLEX ELECTRONIC TECHNOLOGIES, LLC AND SHOULD NOT BE USED WITHOUT WRITTEN PERMISSION

DIMENSION UNITS	SCALE
mm	1:1

GENERAL TOLERANCES (UNLESS SPECIFIED)

ANGULAR TOL	±	2.0 °
4 PLACES	±	
3 PLACES	±	
2 PLACES	±	0.1
1 PLACE	±	0.2
0 PLACES	±	

DRAFT WHERE APPLICABLE MUST REMAIN WITHIN DIMENSIONS

CURRENT REV DESC: 4 NEW PART NUMBERS CREATED IN SHEET NO. 9

EC NO: 783013
DRWN: GOPIS 2024/03/07
CHK'D: RAHULH3 2024/04/12
APPR: MRAMAKRISHNA 2024/04/12

INITIAL REVISION:
DRWN: CFISHER01 2018/01/03
APPR: BRUTTLE 2018/02/07

molex

RAST PWR IDT CONN 5MM PITCH

PRODUCT CUSTOMER DRAWING

DOCUMENT NUMBER	DOC TYPE	DOC PART	REVISION
916270001	PSD	000	H2

THIRD ANGLE PROJECTION	DRAWING	SERIES	MATERIAL NUMBER	CUSTOMER	SHEET NUMBER
	A2-SIZE	91627	SEE TABLES	GENERAL MARKET	6 OF 11

FORMAT: 3PL-ANSI-Prod-A2
REVISION: 1.1
DATE: 2018/01/11

4 CIRCUIT

MOLEX PART NO.	MOLEX HOUSING NO.	TERMINAL VOID POSITION	REMOVED CODING KEYS	CONFIGURATION	LATCH BETWEEN	POLARIZING RIB BETWEEN	FIRST ENDWALL	LAST ENDWALL	COLOUR STRIPE
91627-2001	91626-0004	NONE	NONE	1 2 3 4	NONE	NONE	OPEN	OPEN	NONE
91627-2501	91690-2004	NONE	NONE	1 2 3 4	1&2	NONE	OPEN	OPEN	NONE
91627-2002	91626-0204	NONE	d e f g h	d e f g h 1 2 3 4	NONE	2&3	OPEN	OPEN	RED
91627-2003	91626-0204	NONE	NONE	1 2 3 4	NONE	2&3	OPEN	OPEN	RED
91627-2004	91626-0204	NONE	b d e f g h	b d e f g h 1 2 3 4	NONE	2&3	OPEN	OPEN	RED
91627-2005	91626-0004	NONE	d e f g	d e f g 1 2 3 4	NONE	NONE	OPEN	OPEN	NONE
91627-2006	91626-0004	NONE	b c d f	b c d f 1 2 3 4	NONE	NONE	OPEN	OPEN	NONE
91627-2007	91626-0004	NONE	a b e f h	a b e f h 1 2 3 4	NONE	NONE	OPEN	OPEN	NONE
91627-2008	91626-0004	NONE	a b c d e f g h	a b c d e f g h 1 2 3 4	NONE	NONE	OPEN	OPEN	NONE
91627-2009	91626-0004	NONE	a b f g	a b f g 1 2 3 4	NONE	NONE	OPEN	OPEN	NONE
91627-2503	91690-0224	NONE	NONE	1 2 3 4	1&2 3&4	2&3	SHORT THIN	LONG THICK	NONE
91627-2010	91626-0004	NONE	c d e h	c d e h 1 2 3 4	NONE	NONE	OPEN	OPEN	NONE
91627-2012	91626-0015	NONE	ALL	a b c d e f g h 1 2 3 4	NONE	NONE	LONG THICK	LONG THICK	NONE
91627-2011	91626-0004	NONE	d e f g h	d e f g h 1 2 3 4	NONE	NONE	OPEN	OPEN	NONE
91627-2013	91690-0284	NONE	NONE	1 2 3 4	1&2 3&4	2&3	LONG THICK	OPEN	NONE
91627-2502	91690-0084	NONE	NONE	1 2 3 4	1&2 3&4	NONE	LONG THICK	OPEN	NONE
91627-2014	91626-0004	NONE	b c d e f g	b c d e f g 1 2 3 4	NONE	NONE	OPEN	OPEN	NONE
91627-2015	91690-4104	NONE	NONE	1 2 3 4	3&4	1&2	OPEN	OPEN	NONE
91627-2016	91626-0004	CCT 2	NONE	1 2 3 4	NONE	NONE	OPEN	OPEN	NONE
91627-2017	91626-0004	NONE	b c e f g	b c e f g 1 2 3 4	NONE	NONE	OPEN	OPEN	NONE
91627-2504	91690-0204	NONE	NONE	1 2 3 4	1&2 3&4	2&3	OPEN	OPEN	NONE
91627-2506	91690-0224	NONE	a b c d e f g h	a b c d e f g h 1 2 3 4	1&2 3&4	2&3	SHORT THIN	LONG THICK	NONE
91627-2507	91690-0064	NONE	NONE	1 2 3 4	1&2 3&4	NONE	OPEN	LONG THICK	NONE
91627-2508	91690-0004	NONE	NONE	1 2 3 4	1&2 3&4	NONE	OPEN	OPEN	NONE
91627-2020	91626-0004	NONE	a b c d f g h	a b c d f g h 1 2 3 4	NONE	NONE	OPEN	OPEN	NONE
91627-2021	91626-0004	NONE	a b d e g h	a b d e g h 1 2 3 4	NONE	NONE	OPEN	OPEN	NONE
91627-2022	91626-0215	NONE	a b c d e f g h	a b c d e f g h 1 2 3 4	NONE	2&3	LONG THICK	LONG THICK	NONE

4 CIRCUIT

MOLEX PART NO.	MOLEX HOUSING NO.	TERMINAL VOID POSITION	REMOVED CODING KEYS	CONFIGURATION	LATCH BETWEEN	POLARIZING RIB BETWEEN	FIRST ENDWALL	LAST ENDWALL	COLOUR STRIPE
91627-2023	91626-0315	NONE	NONE	1 2 3 4	NONE	3&4	LONG THICK	LONG THICK	NONE
91627-2024	91626-0215	NONE	NONE	1 2 3 4	NONE	2&3	LONG THICK	LONG THICK	NONE
91627-2025	91690-2304	CCT 2	NONE	1 2 3 4	1&2	3&4	OPEN	OPEN	NONE
91627-2026	91690-0264	NONE	NONE	1 2 3 4	1&2 3&4	2&3	OPEN	LONG THICK	NONE
91627-2509	91690-9901	NONE	NONE	1 2 3 4	1&2 2&3	3&4	OPEN	OPEN	NONE
91627-2510	91690-9903	NONE	NONE	1 2 3 4	1&2 2&3	3&4	LONG THICK	OPEN	NONE
91627-2511	91690-2304	NONE	NONE	1 2 3 4	1&2	3&4	OPEN	OPEN	NONE
91627-2512	91626-0004	NONE	b g	b g 1 2 3 4	NONE	NONE	OPEN	OPEN	NONE
91627-2027	91626-0004	NONE	b d e	b d e 1 2 3 4	NONE	NONE	OPEN	OPEN	NONE
91627-2028	91626-0004	NONE	c e	c e 1 2 3 4	NONE	NONE	OPEN	OPEN	NONE
91627-2529	91690-0044	NONE	NONE	1 2 3 4	1&2 3&4	NONE	SHORT THIN	LONG THICK	NONE
91627-2514	91626-0004	NONE	a b c f g h	a b c f g h 1 2 3 4	NONE	NONE	OPEN	OPEN	NONE
91627-2019	91692-7124	NONE	NONE	1 2 3 4	2&3	1&2 3&4	LONG THIN FLUSH OUTSIDE	LONG THIN FLUSH OUTSIDE	NONE
91627-2515	91626-0004	NONE	a c d e f h	a c d e f h 1 2 3 4	NONE	NONE	OPEN	OPEN	NONE
91627-2516	91692-7125	NONE	NONE	1 2 3 4	2&3	3&4	LONG THIN FLUSH OUTSIDE	LONG THIN FLUSH OUTSIDE	NONE
91627-2517	91692-7126	NONE	NONE	1 2 3 4	2&3	1&2	LONG THIN FLUSH OUTSIDE	LONG THIN FLUSH OUTSIDE	NONE
91627-2518	91636-0224	NONE	NONE	1 2 3 4	NONE	2&3	LONG THIN FLUSH OUTSIDE	LONG THIN FLUSH OUTSIDE	NONE
91627-2519	91636-0324	NONE	NONE	1 2 3 4	NONE	3&4	LONG THIN FLUSH OUTSIDE	LONG THIN FLUSH OUTSIDE	NONE

THIS DRAWING CONTAINS INFORMATION THAT IS PROPRIETARY TO MOLEX ELECTRONIC TECHNOLOGIES, LLC AND SHOULD NOT BE USED WITHOUT WRITTEN PERMISSION

DIMENSION UNITS	SCALE
mm	1:1

GENERAL TOLERANCES (UNLESS SPECIFIED)

ANGULAR TOL	±	2.0 °
4 PLACES	±	
3 PLACES	±	
2 PLACES	±	0.1
1 PLACE	±	0.2
0 PLACES	±	

DRAFT WHERE APPLICABLE MUST REMAIN WITHIN DIMENSIONS

CURRENT REV DESC: 4 NEW PART NUMBERS CREATED IN SHEET NO. 9

EC NO: 783013
DRWN: GOPIS 2024/03/07
CHK'D: RAHULH3 2024/04/12
APPR: MRAMAKRISHNA 2024/04/12

INITIAL REVISION:
DRWN: CFISHER01 2018/01/03
APPR: BRUTTLE 2018/02/07

THIRD ANGLE PROJECTION | DRAWING: A2-SIZE | SERIES: 91627

molex

RAST PWR IDT CONN 5MM PITCH

PRODUCT CUSTOMER DRAWING

DOCUMENT NUMBER	DOC TYPE	DOC PART	REVISION
916270001	PSD	000	H2

MATERIAL NUMBER	CUSTOMER	SHEET NUMBER
SEE TABLES	GENERAL MARKET	7 OF 11

DOCUMENT STATUS	P1	RELEASE DATE	2024/04/12 15:13:28

FORMAT: 914xx-xxxxx-sheet-A2
REVISION: 2
DATE: 2018/08/14

5 CIRCUIT

MOLEX PART NO.	MOLEX HOUSING NO.	TERMINAL VOID POSITION	REMOVED CODING KEYS	CONFIGURATION	LATCH BETWEEN	POLARIZING RIB BETWEEN	FIRST ENDWALL	LAST ENDWALL	COLOUR STRIPE
91627-3001	91626-0005	NONE	NONE	1 2 3 4 5	NONE	NONE	OPEN	OPEN	NONE
91627-3501	91690-2005	NONE	NONE	1 2 3 4 5	1&2	NONE	OPEN	OPEN	NONE
91627-3002	91626-0005	NONE	c d f g i	c d f g i 1 2 3 4 5	NONE	NONE	OPEN	OPEN	NONE
91627-3003	91626-0005	NONE	a b c d e f g h i	a b c d e f g h i 1 2 3 4 5	NONE	NONE	OPEN	OPEN	NONE
91627-3004	91626-0005	NONE	a b c d e f g h i j	a b c d e f g h i j 1 2 3 4 5	NONE	NONE	OPEN	OPEN	NONE
91627-3502	91690-0325	NONE	NONE	1 2 3 4 5	1&2 4&5	3&4	SHORT THIN	LONG THICK	NONE
91627-3503	91690-2425	NONE	NONE	1 2 3 4 5	1&2	4&5	SHORT THIN	LONG THICK	NONE
91627-3504	91690-0205	NONE	NONE	1 2 3 4 5	1&2 4&5	2&3	OPEN	OPEN	NONE
91627-3005	91626-0105	NONE	NONE	1 2 3 4 5	NONE	1&2	OPEN	OPEN	NONE
91627-3007	91626-0016	NONE	a b c d e f g h i j	a b c d e f g h i j 1 2 3 4 5	NONE	NONE	LONG THICK	LONG THICK	NONE
91627-3008	91626-0085	NONE	NONE	1 2 3 4 5	NONE	NONE	LONG THICK	OPEN	NONE
91627-3006	91626-0005	NONE	b c d g h j	b c d g h j 1 2 3 4 5	NONE	NONE	OPEN	OPEN	NONE
91627-3505	91690-0225	NONE	a b c d e f g h i j	a b c d e f g h i j 1 2 3 4 5	1&2 4&5	2&3	SHORT THIN	LONG THICK	NONE
91627-3009	91626-0005	CCT 2 & 4	NONE	1 2 3 4 5	NONE	NONE	OPEN	OPEN	NONE
91627-3507	91690-0065	NONE	NONE	1 2 3 4 5	1&2 4&5	NONE	OPEN	LONG THICK	NONE
91627-3011	91626-0205	NONE	NONE	1 2 3 4 5	NONE	2&3	OPEN	OPEN	NONE
91627-3010	91690-4125	NONE	NONE	1 2 3 4 5	4&5	1&2	SHORT THIN	LONG THICK	NONE
91627-3012	91626-0205	CCT 2 & 4	NONE	1 2 3 4 5	NONE	2&3	OPEN	OPEN	NONE
91627-3013	91690-0025	NONE	NONE	1 2 3 4 5	1&2 4&5	NONE	SHORT THIN	LONG THICK	NONE
91627-3508	91690-0085	NONE	NONE	1 2 3 4 5	1&2 4&5	NONE	LONG THICK	OPEN	NONE
91627-3014	91626-0005	NONE	c e j	c e j 1 2 3 4 5	NONE	NONE	OPEN	OPEN	NONE
91627-3015	91626-0005	NONE	b c d e f g h i	b c d e f g h i 1 2 3 4 5	NONE	NONE	OPEN	OPEN	NONE
91627-3016	91626-0005	NONE	a b c e f h i j	a b c e f h i j 1 2 3 4 5	NONE	NONE	OPEN	OPEN	NONE
91627-3017	91626-0005	NONE	a b c d f g h i j	a b c d f g h i 1 2 3 4 5	NONE	NONE	OPEN	OPEN	NONE
91627-3018	91690-9902	NONE	NONE	1 2 3 4 5	2&3 4&5	1&2	OPEN	OPEN	NONE
91627-3019	91690-9904	NONE	NONE	1 2 3 4 5	3&4	2&3	OPEN	OPEN	NONE
91627-3020	91690-9905	NONE	NONE	1 2 3 4 5	1&2 4&5	2&3	OPEN	LONG THIN FLUSH OUTSIDE	NONE
91627-3021	91690-9902	CCT 2 & 4	NONE	1 2 3 4 5	2&3 4&5	1&2	OPEN	OPEN	NONE

6 CIRCUIT

MOLEX PART NO.	MOLEX HOUSING NO.	TERMINAL VOID POSITION	REMOVED CODING KEYS	CONFIGURATION	LATCH BETWEEN	POLARIZING RIB BETWEEN	FIRST ENDWALL	LAST ENDWALL	COLOUR STRIPE
91627-4001	91626-0006	NONE	NONE	1 2 3 4 5 6	NONE	NONE	OPEN	OPEN	NONE
91627-4501	91690-2006	NONE	NONE	1 2 3 4 5 6	1&2	NONE	OPEN	OPEN	NONE
91627-4002	91626-2006	NONE	a b c d g h i j k l + b2 c2 d2 e2 f2 g2 h2 i2 j2 k2	a b c d g h i j k l 1 2 3 4 5 6 b c d e f g h i j k 2 2 2 2 2 2 2 2 2 2	NONE	NONE	OPEN	OPEN	NONE
91627-4502	91690-0306	NONE	NONE	1 2 3 4 5 6	1&2 5&6	3&4	OPEN	OPEN	NONE
91627-4003	91626-0006	NONE	a b c d e f g h i j k l	a b c d e f g h i j k l 1 2 3 4 5 6	NONE	NONE	OPEN	OPEN	NONE
91627-4004	91626-0006	NONE	a l	a l 1 2 3 4 5 6	NONE	NONE	OPEN	OPEN	NONE
91627-4503	91690-2526	NONE	NONE	1 2 3 4 5 6	1&2	5&6	SHORT THIN	LONG THICK	NONE
91627-4005	91626-0206	NONE	NONE	1 2 3 4 5 6	NONE	2&3	OPEN	OPEN	NONE
91627-4006	91626-0006	NONE	c d e h i j	c d e h i j 1 2 3 4 5 6	NONE	NONE	OPEN	OPEN	NONE
91627-4007	91626-0006	NONE	a b e f g h k l	a b e f g h k l 1 2 3 4 5 6	NONE	NONE	OPEN	OPEN	NONE
91627-4504	91690-0206	NONE	NONE	1 2 3 4 5 6	1&2 5&6	2&3	OPEN	OPEN	NONE
91627-4008	91626-0226	NONE	NONE	1 2 3 4 5 6	NONE	2&3	SHORT THIN	LONG THICK	NONE
91627-4507	91690-0026	NONE	NONE	1 2 3 4 5 6	1&2 5&6	NONE	SHORT THIN	LONG THICK	NONE
91627-4508	91690-0206	NONE	NONE	1 2 3 4 5 6	1&2 5&6	2&3	OPEN	OPEN	BLACK
91627-4509	91690-0066	NONE	NONE	1 2 3 4 5 6	1&2 5&6	NONE	OPEN	LONG THICK	NONE
91627-4009	91626-0006	NONE	b c d e f g h i j k	b c d e f g h i j k 1 2 3 4 5 6	NONE	NONE	OPEN	OPEN	NONE
91627-4010	91626-0017	NONE	a b c d e f g h i j k l	a b c d e f g h i j k l 1 2 3 4 5 6	NONE	NONE	LONG THICK	LONG THICK	NONE
91627-4011	91690-0026	CCT 6	NONE	1 2 3 4 5 6	1&2 5&6	NONE	SHORT THIN	LONG THICK	NONE
91627-4012	91626-2006	NONE	NONE	1 2 3 4 5 6	NONE	NONE	OPEN	OPEN	NONE
91627-4013	91626-2006	NONE	a b c d e f i j k l + b2 c2 d2 e2 f2 g2 h2 i2 j2 k2	a b c d e f i j k l 1 2 3 4 5 6 b c d e f g h i j k 2 2 2 2 2 2 2 2 2 2	NONE	NONE	OPEN	OPEN	NONE
91627-4014	91690-0226	NONE	NONE	1 2 3 4 5 6	1&2 5&6	2&3	SHORT THIN	LONG THICK	NONE
91627-4015	91636-0026	NONE	NONE	1 2 3 4 5 6	NONE	NONE	LONG THIN FLUSH OUTSIDE	LONG THIN FLUSH OUTSIDE	NONE
91627-4016	91636-0086	NONE	NONE	1 2 3 4 5 6	NONE	NONE	1.5MM HIGH	1.5MM HIGH	NONE
91627-4017	91690-0217	NONE	NONE	1 2 3 4 5 6	1&2 5&6	2&3	LONG THICK	LONG THICK	NONE
91627-4018	91626-0006	NONE	a d	a d 1 2 3 4 5 6	NONE	NONE	OPEN	OPEN	NONE

THIS DRAWING CONTAINS INFORMATION THAT IS PROPRIETARY TO MOLEX ELECTRONIC TECHNOLOGIES, LLC AND SHOULD NOT BE USED WITHOUT WRITTEN PERMISSION

DIMENSION UNITS	SCALE
mm	1:1

GENERAL TOLERANCES (UNLESS SPECIFIED)

ANGULAR TOL	±	2.0 °
4 PLACES	±	
3 PLACES	±	
2 PLACES	±	0.1
1 PLACE	±	0.2
0 PLACES	±	

DRAFT WHERE APPLICABLE MUST REMAIN WITHIN DIMENSIONS

CURRENT REV DESC: 4 NEW PART NUMBERS CREATED IN SHEET NO. 9

EC NO: 783013
DRWN: GOPIS 2024/03/07
CHK'D: RAHULH3 2024/04/12
APPR: MRAMAKRISHNA 2024/04/12

INITIAL REVISION:
DRWN: CFISHER01 2018/01/03
APPR: BRUTTLE 2018/02/07

THIRD ANGLE PROJECTION | DRAWING: A2-SIZE | SERIES: 91627

molex

RAST PWR IDT CONN 5MM PITCH

PRODUCT CUSTOMER DRAWING

DOCUMENT NUMBER	DOC TYPE	DOC PART	REVISION
916270001	PSD	000	H2

MATERIAL NUMBER	CUSTOMER	SHEET NUMBER
SEE TABLES	GENERAL MARKET	8 OF 11

DOCUMENT STATUS	P1	RELEASE DATE	2024/04/12 15:13:28

FORMAT: 91627_Prod-A2
REVISION: H
DATE: 2018/01/12

6 CIRCUIT

MOLEX PART NO.	MOLEX HOUSING NO.	TERMINAL VOID POSITION	REMOVED CODING KEYS	CONFIGURATION	LATCH BETWEEN	POLARIZING RIB BETWEEN	FIRST ENDWALL	LAST ENDWALL	COLOUR STRIPE	
91627-4019	91665-4003	NONE	NONE	1 2 3 4 5 6	3&4	5&6	OPEN	OPEN	NONE	
91627-4020	91690-0406	NONE	NONE	1 2 3 4 5 6	1&2 5&6	4&5	OPEN	OPEN	NONE	
91627-4021	91690-9906	NONE	NONE	1 2 3 4 5 6	3&4	1&2	OPEN	OPEN	NONE	H2
91627-4022	91690-4306	NONE	NONE	1 2 3 4 5 6	5&6	3&4	OPEN	OPEN	NONE	H2

7 CIRCUIT

MOLEX PART NO.	MOLEX HOUSING NO.	TERMINAL VOID POSITION	REMOVED CODING KEYS	CONFIGURATION	LATCH BETWEEN	POLARIZING RIB BETWEEN	FIRST ENDWALL	LAST ENDWALL	COLOUR STRIPE	
91627-5001	91626-0007	NONE	NONE	1 2 3 4 5 6 7	NONE	NONE	OPEN	OPEN	NONE	
91627-5501	91690-2007	NONE	NONE	1 2 3 4 5 6 7	1&2	NONE	OPEN	OPEN	NONE	
91627-5502	91690-0027	NONE	NONE	1 2 3 4 5 6 7	1&2 6&7	NONE	SHORT THIN	LONG THICK	NONE	
91627-5002	91626-0007	NONE	b c d e f h i j k l m	b c d e f h i j k l m 1 2 3 4 5 6 7	NONE	NONE	OPEN	OPEN	NONE	
91627-5003	91626-0007	NONE	b c e f g i j k m n	b c e f g i j k m n 1 2 3 4 5 6 7	NONE	NONE	OPEN	OPEN	ORANGE	
91627-5004	91626-0007	NONE	c d g h i j k	c d g h i j k 1 2 3 4 5 6 7	NONE	NONE	OPEN	OPEN	NONE	
91627-5503	91690-0307	NONE	NONE	1 2 3 4 5 6 7	1&2 6&7	3&4	OPEN	OPEN	NONE	
91627-5504	91690-0007	NONE	NONE	1 2 3 4 5 6 7	1&2 6&7	NONE	OPEN	OPEN	NONE	
91627-5005	91626-0007	NONE	a b c d e g h i j k l m	a b c d e g h i j k l m 1 2 3 4 5 6 7	NONE	NONE	OPEN	OPEN	NONE	
91627-5006	91626-0207	NONE	NONE	1 2 3 4 5 6 7	NONE	2&3	OPEN	OPEN	NONE	
91627-5007	91626-2007	NONE	a b c d e f i j k l m b2 c2 d2 e2 f2 g2 h2 i2 j2 k2 m2	a b c d e f i j k l m 1 2 3 4 5 6 7 b c d e f g h i j k m 2 2 2 2 2 2 2 2 2 2 2	NONE	NONE	OPEN	OPEN	NONE	
91627-5008	91626-0007	NONE	c d e f g h i j k l m n	c d e f g h i j k l m n 1 2 3 4 5 6 7	NONE	NONE	OPEN	OPEN	NONE	
91627-5506	91690-0227	NONE	a b c d e f g h i j k l m n	a b c d e f g h i j k l m n 1 2 3 4 5 6 7	1&2 6&7	2&3	SHORT THIN	LONG THICK	NONE	
91627-5009	91626-0007	NONE	m n	m n 1 2 3 4 5 6 7	NONE	NONE	OPEN	OPEN	NONE	
91627-5010	91626-0007	NONE	NONE	1 2 3 4 5 6 7	NONE	NONE	OPEN	OPEN	GREEN	
91627-5507	91690-0027	NONE	a b c d e f g h i j k l m n	a b c d e f g h i j k l m n 1 2 3 4 5 6 7	1&2 6&7	NONE	SHORT THIN	LONG THICK	NONE	
91627-5011	91626-0007	NONE	b c d e f g h i j k l m	b c d e f g h i j k l m 1 2 3 4 5 6 7	NONE	NONE	OPEN	OPEN	NONE	
91627-5012	91626-0007	NONE	c d g i j l m n	c d g i j l m n 1 2 3 4 5 6 7	NONE	NONE	OPEN	OPEN	NONE	
91627-5013	91626-0007	NONE	c d g i j k l m n	c d g i j k l m n 1 2 3 4 5 6 7	NONE	NONE	OPEN	OPEN	NONE	
91627-5014	91626-0507	NONE	NONE	1 2 3 4 5 6 7	NONE	5&6	OPEN	OPEN	NONE	
91627-5015	91626-0527	NONE	NONE	1 2 3 4 5 6 7	NONE	5&6	SHORT THIN	LONG THICK	NONE	
91627-5016	91636-0087	NONE	NONE	1 2 3 4 5 6 7	NONE	NONE	1.5MM HIGH	1.5MM HIGH	NONE	
91627-5017	91690-0227	NONE	NONE	1 2 3 4 5 6 7	1&2 6&7	2&3	SHORT THIN	LONG THICK	NONE	
91627-5018	91626-9907	NONE	NONE	1 2 3 4 5 6 7	3&4	2&3	OPEN	OPEN	NONE	H2

8 CIRCUIT

MOLEX PART NO.	MOLEX HOUSING NO.	TERMINAL VOID POSITION	REMOVED CODING KEYS	CONFIGURATION	LATCH BETWEEN	POLARIZING RIB BETWEEN	FIRST ENDWALL	LAST ENDWALL	COLOUR STRIPE	
91627-6001	91626-0008	NONE	NONE	1 2 3 4 5 6 7 8	NONE	NONE	OPEN	OPEN	NONE	
91627-6501	91690-2008	NONE	NONE	1 2 3 4 5 6 7 8	1&2	NONE	OPEN	OPEN	NONE	
91627-6502	91690-0308	NONE	NONE	1 2 3 4 5 6 7 8	1&2 7&8	3&4	OPEN	OPEN	NONE	
91627-6002	91626-0208	NONE	NONE	1 2 3 4 5 6 7 8	NONE	2&3	OPEN	OPEN	NONE	
91627-6003	91626-0019	NONE	a b c d e f g h i j k l m n o p	a b c d e f g h i j k l m n o p 1 2 3 4 5 6 7 8	NONE	NONE	LONG THICK	LONG THICK	NONE	
91627-6004	91626-0419	NONE	NONE	1 2 3 4 5 6 7 8	NONE	4&5	LONG THICK	LONG THICK	NONE	
91627-6005	91626-0008	NONE	b o	b o 1 2 3 4 5 6 7 8	NONE	NONE	OPEN	OPEN	NONE	
91627-6006	91626-0008	NONE	b c d e f g h i j k l m n o	b c d e f g h i j k l m n o 1 2 3 4 5 6 7 8	NONE	NONE	OPEN	OPEN	NONE	
91627-6007	91636-0528	NONE	NONE	1 2 3 4 5 6 7 8	NONE	5&6	LONG THIN FLUSH OUTSIDE	LONG THIN FLUSH OUTSIDE	NONE	
91627-6008	91690-0208	NONE	NONE	1 2 3 4 5 6 7 8	1&2 7&8	2&3	OPEN	OPEN	NONE	
91627-6009	91690-0408	NONE	NONE	1 2 3 4 5 6 7 8	1&2 7&8	4&5	OPEN	OPEN	NONE	H2

THIS DRAWING CONTAINS INFORMATION THAT IS PROPRIETARY TO MOLEX ELECTRONIC TECHNOLOGIES, LLC AND SHOULD NOT BE USED WITHOUT WRITTEN PERMISSION

DIMENSION UNITS	SCALE
mm	1:1

GENERAL TOLERANCES (UNLESS SPECIFIED)

ANGULAR TOL	±	2.0 °
4 PLACES	±	
3 PLACES	±	
2 PLACES	±	0.1
1 PLACE	±	0.2
0 PLACES	±	

DRAFT WHERE APPLICABLE MUST REMAIN WITHIN DIMENSIONS

CURRENT REV DESC: 4 NEW PART NUMBERS CREATED IN SHEET NO. 9

EC NO: 783013
DRWN: GOPIS 2024/03/07
CHK'D: RAHULH3 2024/04/12
APPR: MRAMAKRISHNA 2024/04/12

INITIAL REVISION:
DRWN: CFISHER01 2018/01/03
APPR: BRUTTLE 2018/02/07

THIRD ANGLE PROJECTION | DRAWING: A2-SIZE | SERIES: 91627

molex

RAST PWR IDT CONN 5MM PITCH

PRODUCT CUSTOMER DRAWING

DOCUMENT NUMBER	DOC TYPE	DOC PART	REVISION
916270001	PSD	000	H2

MATERIAL NUMBER	CUSTOMER	SHEET NUMBER
SEE TABLES	GENERAL MARKET	9 OF 11

DOCUMENT STATUS	P1	RELEASE DATE	2024/04/12 15:13:28

FORMAT: 91627-Prod-A2
REVISION: 1
DATE: 2018/01/12

9 CIRCUIT

MOLEX PART NO.	MOLEX HOUSING NO.	TERMINAL VOID POSITION	REMOVED CODING KEYS	CONFIGURATION	LATCH BETWEEN	POLARIZING RIB BETWEEN	FIRST ENDWALL	LAST ENDWALL	COLOUR STRIPE
91627-7001	91626-0009	NONE	NONE	1 2 3 4 5 6 7 8 9	NONE	NONE	OPEN	OPEN	NONE
91627-7501	91690-2009	NONE	NONE	1 2 3 4 5 6 7 8 9	1&2	NONE	OPEN	OPEN	NONE
91627-7502	91690-0029	NONE	NONE	1 2 3 4 5 6 7 8 9	1&2 8&9	NONE	SHORT THIN	LONG THICK	NONE
91627-'7503	91690-0029	NONE	a b c d e f g h i j k l m n o p q r	a b c d e f g h i j k l m n o p q r 1 2 3 4 5 6 7 8 9	1&2 8&9	NONE	SHORT THIN	LONG THICK	NONE
91627-7002	91626-0009	NONE	a b c d e f g h i j k l m n o p q r	a b c d e f g h i j k l m n o p q r 1 2 3 4 5 6 7 8 9	NONE	NONE	OPEN	OPEN	NONE
91627-7504	91690-2309	NONE	NONE	1 2 3 4 5 6 7 8 9	1&2	3&4	OPEN	OPEN	NONE
91627-7003	91626-0209	NONE	NONE	1 2 3 4 5 6 7 8 9	NONE	2&3	OPEN	OPEN	NONE
91627-7005	91626-0089	NONE	NONE	1 2 3 4 5 6 7 8 9	NONE	NONE	LONG THICK	OPEN	NONE
91627-7004	91626-0069	NONE	ALL	a b c d e f g h i j k l m n o p q r 1 2 3 4 5 6 7 8 9	NONE	NONE	OPEN	LONG THICK	NONE
91627-7505	91690-0229	NONE	NONE	1 2 3 4 5 6 7 8 9	1&2 8&9	2&3	SHORT THIN	LONG THICK	NONE
91627-7506	91690-0209	NONE	NONE	1 2 3 4 5 6 7 8 9	1&2 8&9	2&3	OPEN	OPEN	NONE
91627-7507	91690-0309	NONE	NONE	1 2 3 4 5 6 7 8 9	1&2 8&9	3&4	OPEN	OPEN	NONE
91627-7006	91626-0020	NONE	a b c d e f g h i j k l m n o p q r	a b c d e f g h i j k l m n o p q r 1 2 3 4 5 6 7 8 9	NONE	NONE	LONG THICK	LONG THICK	NONE
91627-7007	91626-0009	NONE	b c d e f g h i j k l m n o p q	b c d e f g h i j k l m n o p q 1 2 3 4 5 6 7 8 9	NONE	NONE	OPEN	OPEN	NONE
91627-7509	91690-0220	NONE	NONE	1 2 3 4 5 6 7 8 9	1&2 8&9	2&3	LONG THICK	LONG THICK	NONE
91627-7510	91636-0729	NONE	NONE	1 2 3 4 5 6 7 8 9	NONE	7&8	LONG THIN FLUSH OUTSIDE	LONG THIN FLUSH OUTSIDE	NONE
91627-7511	91626-0009	NONE	b c d e f g h i j k l m n o p q r	b c d e f g h i j k l m n o p q r 1 2 3 4 5 6 7 8 9	NONE	NONE	OPEN	OPEN	NONE
91627-7512	91692-0229	CKT 3	NONE	1 2 3 4 5 6 7 8 9	1&2 8&9	2&3	LONG THIN FLUSH OUTSIDE	LONG THIN FLUSH OUTSIDE	NONE

10 CIRCUIT

MOLEX PART NO.	MOLEX HOUSING NO.	TERMINAL VOID POSITION	REMOVED CODING KEYS	CONFIGURATION	LATCH BETWEEN	POLARIZING RIB BETWEEN	FIRST ENDWALL	LAST ENDWALL	COLOUR STRIPE
91627-8001	91626-0010	NONE	NONE	1 2 3 4 5 6 7 8 9 10	NONE	NONE	OPEN	OPEN	NONE
91627-8501	91690-2010	NONE	NONE	1 2 3 4 5 6 7 8 9 10	1&2	NONE	OPEN	OPEN	NONE
91627-8002	91626-0110	NONE	NONE	1 2 3 4 5 6 7 8 9 10	NONE	1&2	OPEN	OPEN	NONE
91627-8003	91626-0310	NONE	NONE	1 2 3 4 5 6 7 8 9 10	NONE	3&4	OPEN	OPEN	NONE
91627-8004	91626-0090	NONE	NONE	1 2 3 4 5 6 7 8 9 10	NONE	NONE	LONG THICK	OPEN	NONE

THIS DRAWING CONTAINS INFORMATION THAT IS PROPRIETARY TO MOLEX ELECTRONIC TECHNOLOGIES, LLC AND SHOULD NOT BE USED WITHOUT WRITTEN PERMISSION

DIMENSION UNITS	SCALE
mm	1:1

GENERAL TOLERANCES (UNLESS SPECIFIED)

ANGULAR TOL	±	2.0 °
4 PLACES	±	
3 PLACES	±	
2 PLACES	±	0.1
1 PLACE	±	0.2
0 PLACES	±	

DRAFT WHERE APPLICABLE MUST REMAIN WITHIN DIMENSIONS

CURRENT REV DESC: 4 NEW PART NUMBERS CREATED IN SHEET NO. 9

EC NO: 783013
DRWN: GOPIS 2024/03/07
CHK'D: RAHULH3 2024/04/12
APPR: MRAMAKRISHNA 2024/04/12

INITIAL REVISION:
DRWN: CFISHER01 2018/01/03
APPR: BRUTTLE 2018/02/07

molex

RAST PWR IDT CONN 5MM PITCH

PRODUCT CUSTOMER DRAWING

DOCUMENT NUMBER	DOC TYPE	DOC PART	REVISION
916270001	PSD	000	H2

THIRD ANGLE PROJECTION	DRAWING	SERIES	MATERIAL NUMBER	CUSTOMER	SHEET NUMBER
	A2-SIZE	91627	SEE TABLES	GENERAL MARKET	10 OF 11

DOCUMENT STATUS	P1	RELEASE DATE	2024/04/12 15:13:28

FORMAT: 3D_CUSTOM-A2
REVISION: A
DATE: 2018/01/12

11 CIRCUIT

MOLEX PART NO.	MOLEX HOUSING NO.	TERMINAL VOID POSITION	REMOVED CODING KEYS	CONFIGURATION	LATCH BETWEEN	POLARIZING RIB BETWEEN	FIRST ENDWALL	LAST ENDWALL	COLOUR STRIPE
91627-9001	91626-0011	NONE	NONE	1 2 3 4 5 6 7 8 9 10 11	NONE	NONE	OPEN	OPEN	NONE
91627-9251	91690-2011	NONE	NONE	1 2 3 4 5 6 7 8 9 10 11	1&2	NONE	OPEN	OPEN	NONE

12 CIRCUIT

MOLEX PART NO.	MOLEX HOUSING NO.	TERMINAL VOID POSITION	REMOVED CODING KEYS	CONFIGURATION	LATCH BETWEEN	POLARIZING RIB BETWEEN	FIRST ENDWALL	LAST ENDWALL	COLOUR STRIPE
91627-9501	91626-0012	NONE	NONE	1 2 3 4 5 6 7 8 9 10 11	NONE	NONE	OPEN	OPEN	NONE
91627-9751	91690-2012	NONE	NONE	1 2 3 4 5 6 7 8 9 10 11	1&2	NONE	OPEN	OPEN	NONE

THIS DRAWING CONTAINS INFORMATION THAT IS PROPRIETARY TO MOLEX ELECTRONIC TECHNOLOGIES, LLC AND SHOULD NOT BE USED WITHOUT WRITTEN PERMISSION

DIMENSION UNITS	SCALE
mm	1:1

GENERAL TOLERANCES (UNLESS SPECIFIED)

ANGULAR TOL	±	2.0 °
4 PLACES	±	
3 PLACES	±	
2 PLACES	±	0.1
1 PLACE	±	0.2
0 PLACES	±	

DRAFT WHERE APPLICABLE MUST REMAIN WITHIN DIMENSIONS

CURRENT REV DESC: 4 NEW PART NUMBERS CREATED IN SHEET NO. 9

EC NO: 783013
DRWN: GOPIS 2024/03/07
CHK'D: RAHULH3 2024/04/12
APPR: MRAMAKRISHNA 2024/04/12

INITIAL REVISION:
DRWN: CFISHER01 2018/01/03
APPR: BRUTTLE 2018/02/07

THIRD ANGLE PROJECTION | DRAWING: A2-SIZE | SERIES: 91627

molex

RAST PWR IDT CONN 5MM PITCH

PRODUCT CUSTOMER DRAWING

DOCUMENT NUMBER	DOC TYPE	DOC PART	REVISION
916270001	PSD	000	H2

MATERIAL NUMBER	CUSTOMER	SHEET NUMBER
SEE TABLES	GENERAL MARKET	11 OF 11

DOCUMENT STATUS	P1	RELEASE DATE	2024/04/12 15:13:28

FORMAT: dpm-prod-A2
REVISION: 1.4
DATE: 2018/01/11