CUDEVICES

SERIES: TS12 | DESCRIPTION: TACTILE SWITCH

FEATURES

- 7.4 x 7.4 mm
- 5~7 mm actuator
- joystick style (center push & 4-directional)
- surface mount



RoHS

SPECIFICATIONS

parameter	conditions/description	min	typ	max	units
rated voltage		1		12	Vdc
rated current		0.01		50	mA
withstanding voltage	for 1 minute		250		Vac
contact resistance	applying load of 2 times operating force at 5 Vdc, 10 mA			100	mΩ
insulation resistance	at 100 Vdc for 1 minute	100			MΩ
operating force	see force table				
actuator travel	center push 4-directional	0.05 0.1	0.15 0.2	0.25 0.3	mm mm
operating temperature		-30		80	°C
storage temperature		-40		90	°C
life	rated load, 2 cycles/second, 1.5 times operating force 250 gf models 360 gf models		 50,000 30,000		 cycles cycles
vibration	10~55~10 Hz, 1.5 mm amplitude, 2 hours on each XYZ				
flammability rating	see material table				
RoHS	yes				

PART NUMBER KEY

TS12- 74 - XX - BK - XXX - SMT - TR

- TS12- 74 - : Base Number
- XX : Actuator Height:
  *50 = 5.0 mm
  60 = 6.0 mm
  70 = 7.0 mm
- XXX : Center Push Force:
  250 = 250 gf
  360 = 360 gf

Note: *Only available with 250 gf center push force.

MECHANICAL DRAWING (TS12-74-60-BK-360-SMT-TR)

units: mm
tolerance: ±0.2 mm
unless otherwise noted

ITEM	DESCRIPTION	MATERIAL	PLATING/COLOR
1	case	LCP	black
2	terminal	phosphor bronze	silver
3	contacts	SUS	silver
4	button	PA6T (UL94HB)	black
5	stem	PPA (UL94V-0)	black
6	cover	SUS	nickel

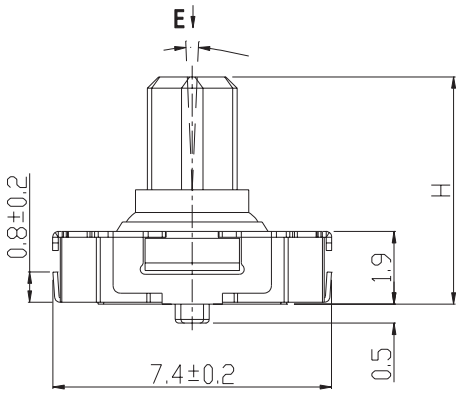

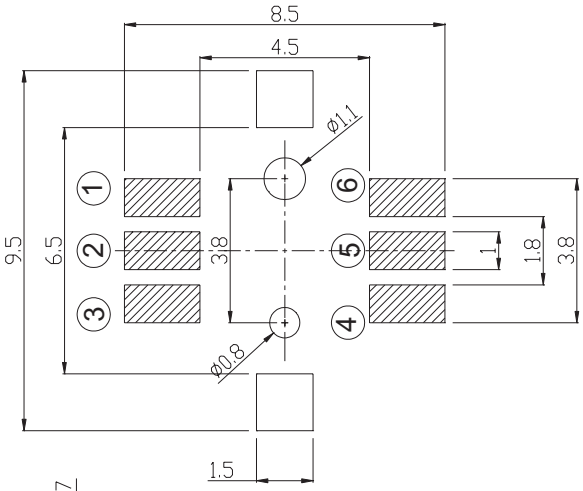

Recommended PCB Layout
Top View

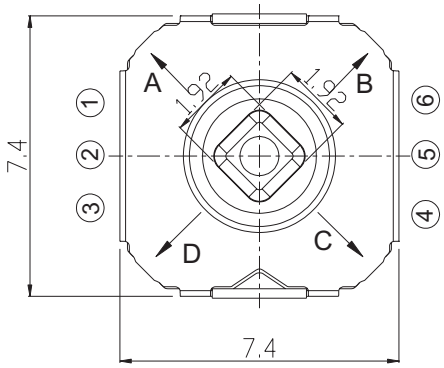

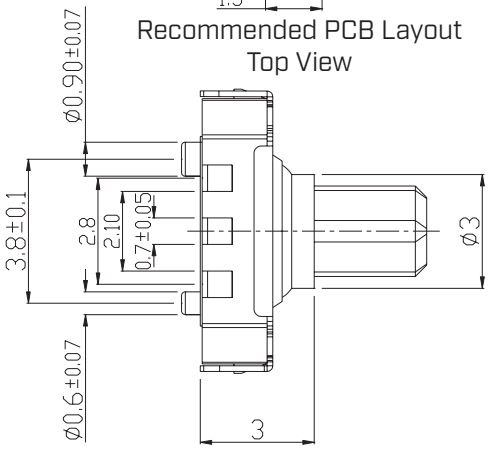

ACTUATOR POSITION [ ]: MOMENTARY	
NORMAL	DOWN
OFF	[ON]
SCHEMATIC	

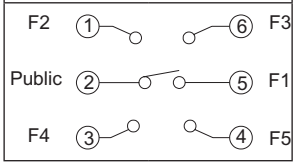

Operting Force Table			
Model	Center Press Force (gf)	4-Directional Press Force (gf)	Return Force (gf)
	PUSH	A B C D	
360	360±90	260±70	>20

MECHANICAL DRAWING (TS12-74-50-BK-250-SMT-TR & TS12-74-60-BK-250-SMT-TR)

units: mm
tolerance: ±0.2 mm
unless otherwise noted

ITEM	DESCRIPTION	MATERIAL	PLATING/COLOR
1	case	LCP	black
2	terminal	phosphor bronze	silver
3	contacts	SUS	silver
4	PI	teflon	gray
5	button	PA6T (UL94HB)	black
6	stem	PPA (UL94V-0)	black
7	cover	SUS	silver

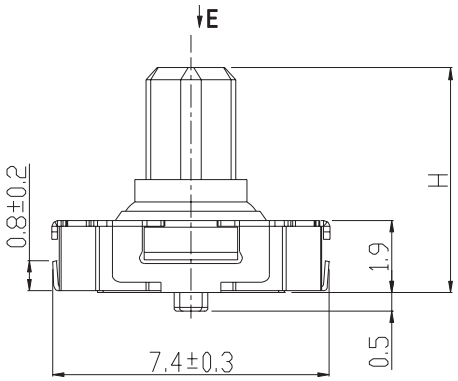

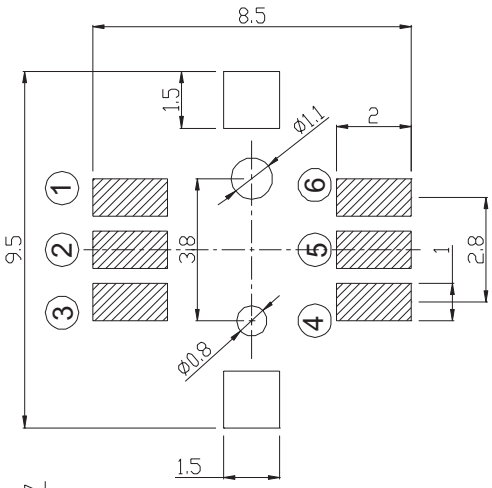

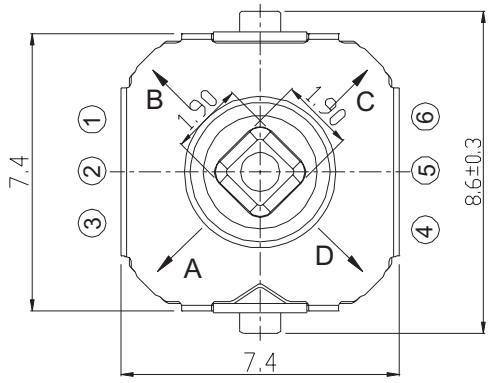

Recommended PCB Layout
Top View

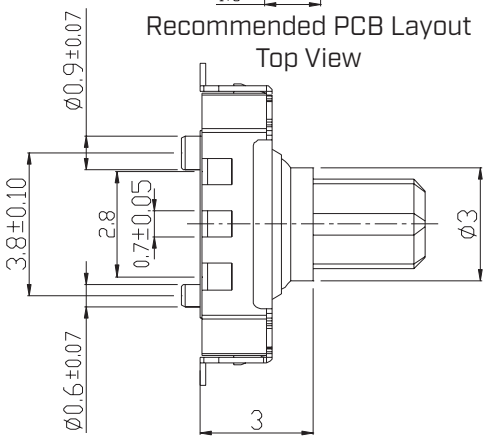

ACTUATOR POSITION [ ]: MOMENTARY	
NORMAL	DOWN
OFF	[ON]
SCHEMATIC	

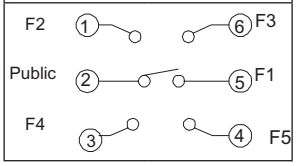

Operting Force Table			
Model	Center Press Force (gf)	4-Directional Press Force (gf)	Return Force (gf)
	PUSH 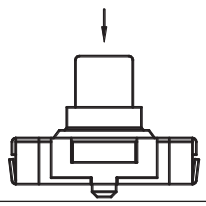	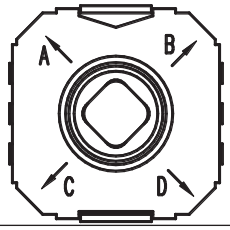	
250	250±70	160±50	>20

MECHANICAL DRAWING (TS12-74-70-BK-250-SMT-TR & TS12-74-70-BK-360-SMT-TR)

units: mm
tolerance: ±0.2 mm
unless otherwise noted

ITEM	DESCRIPTION	MATERIAL	PLATING/COLOR
1	case	LCP	black
2	contacts	phosphor bronze	silver
3	dust film	teflon	
4	button	PA6T (UL94HB)	black
5	cover	stainless steel	nickel
6	stem	PA6T (UL94V-0)	black

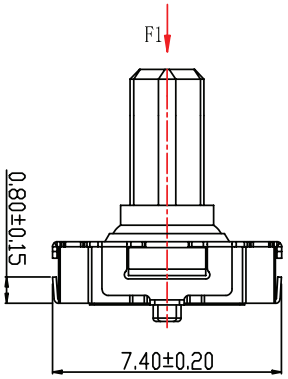

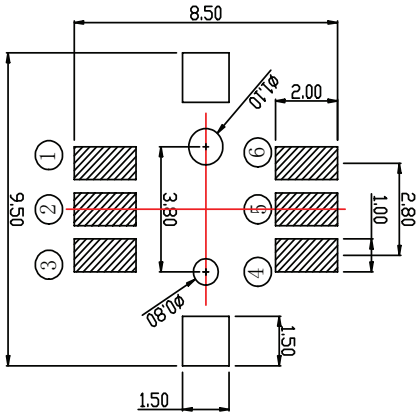

Recommended PCB Layout
Top View

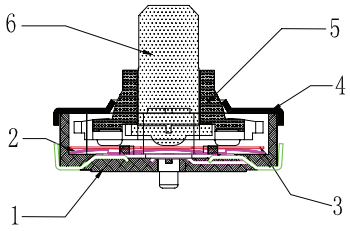

ACTUATOR POSITION [ ]: MOMENTARY	
NORMAL	DOWN
OFF	[ON]
SCHEMATIC	

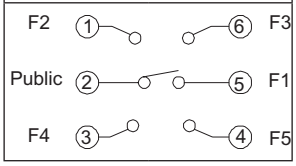

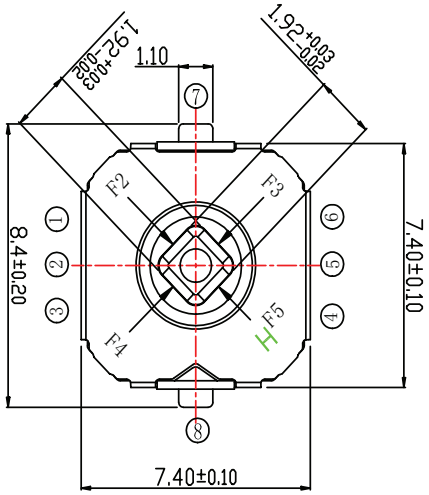

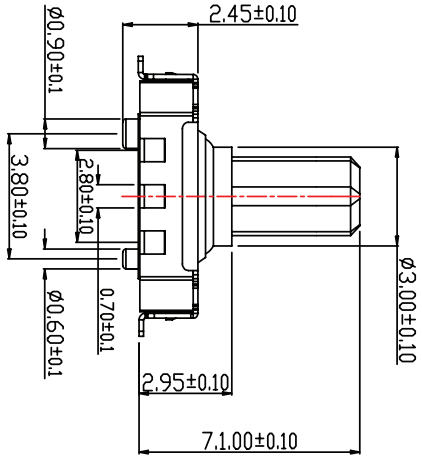

Operting Force Table			
Model	Center Press Force (gf) PUSH 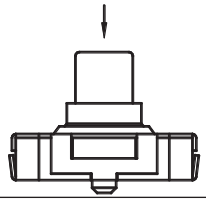	4-Directional Press Force (gf) 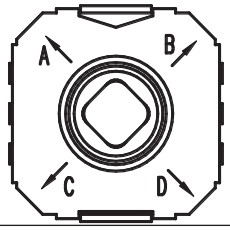	Return Force (gf)
250	250±70	160±50	>20
360	360±80	240±70	>20

SOLDERABILITY

parameter	conditions/description	min	typ	max	units
hand soldering	for maximum 3 seconds			350	°C
reflow soldering[1]	see reflow profile			260	°C

Notes: 1. Do not exceed 2 reflow cycles.

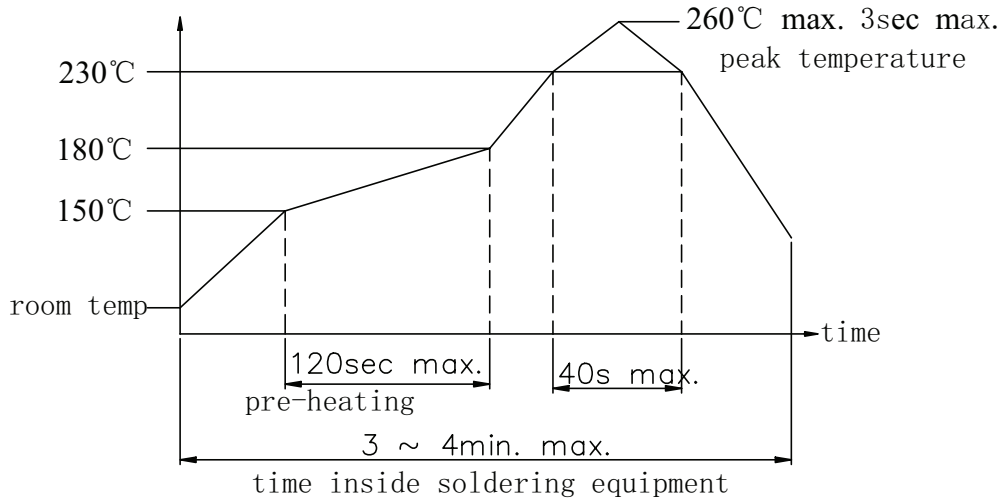

PACKAGING

Packaging Table			
Actuator Height Models (mm)	Reel QTY	Carton Size (XxYxZ) (mm)	Carton QTY
5	1,000	340 x 430 x 340	20,000
6	800	340 x 430 x 340	16,000
7	700	340 x 430 x 340	10,500

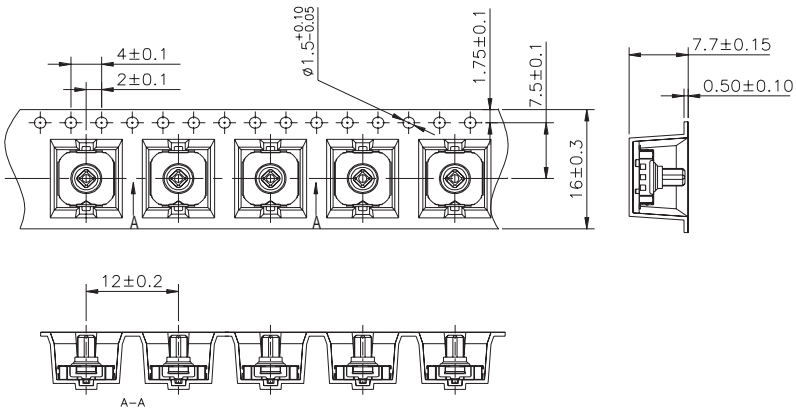

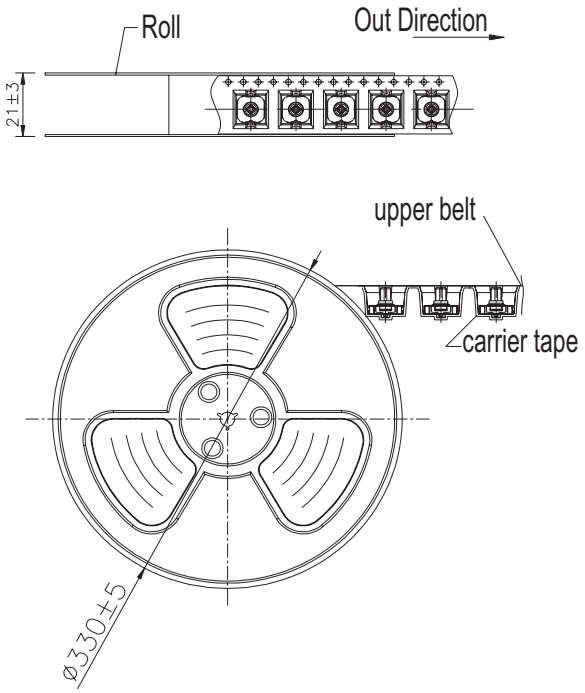

REVISION HISTORY

rev.	description	date
1.0	initial release	04/14/2022
1.01	logo, datasheet style update	08/05/2022

The revision history provided is for informational purposes only and is believed to be accurate.

CUI Devices offers a one (1) year limited warranty. Complete warranty information is listed on our website.

CUI Devices reserves the right to make changes to the product at any time without notice. Information provided by CUI Devices is believed to be accurate and reliable. However, no responsibility is assumed by CUI Devices for its use, nor for any infringements of patents or other rights of third parties which may result from its use.

CUI Devices products are not authorized or warranted for use as critical components in equipment that requires an extremely high level of reliability. A critical component is any component of a life support device or system whose failure to perform can be reasonably expected to cause the failure of the life support device or system, or to affect its safety or effectiveness.

cuidevices.com