Product data sheet

Specifications



Switch, manual, 30A, 3 pole, 10 HP at 575 VAC, three phase, toggle operated, red 208/277 VAC indicator, NEMA 1 enclosure

2510KG2B

Product availability: Non-Stock - Not normally stocked in distribution facility

Main

Product	Single Unit Manual Switch
Type	K

Complementary

Current Rating	30 A
Cable Entry	0.5" and 0.75" knock-outs (top and bottom)
Horsepower Rating	2 hp 115 V AC 1 hp 90 V DC 2 hp 115 V DC 1.5 hp 230 V DC 7.5 hp 230 V AC 10 hp 460 V AC 10 hp 575 V AC
Maximum Voltage Rating	600 V AC 230 V DC
Number of Poles	3P
Control Unit Type	Toggle
Number of Phases	3 phase
Pilot Light	Red indicator, 208...277 V
Starter Type	Non reversing
Electrical Connection	Screw clamp terminals
Wire Gauge	AWG 14...AWG 10 copper
Height	4.25 in (107.95 mm)
Width	2.44 in (61.98 mm)
Depth	2.75 in (69.85 mm)

Environment

Certifications	UL listed file E42243 CCN NLRV CSA LR25490 class 3211 05
NEMA Enclosure Rating	NEMA 1 Plastic standard size

Ordering and shipping details

Category	US10CP121102
Discount Schedule	0CP1
GTIN	785901554516

Price is “List Price” and may be subject to a trade discount – check with your local distributor or retailer for actual price.

Disclaimer: This documentation is not intended as a substitute for and is not to be used for determining suitability or reliability of these products for specific user applications

Returnability	Yes
Country of origin	MX

Packing Units

Unit Type of Package 1	PCE
Nbr. of units in pkg.	1
Package 1 Height	2.600 in (6.604 cm)
Package 1 Width	3.00 in (7.62 cm)
Package 1 Length	4.700 in (11.938 cm)
Package weight(Lbs)	14.080 oz (399.161 g)

Contractual warranty

Warranty	18 months

Environmental Data

Schneider Electric aims to achieve Net Zero status by 2050 through supply chain partnerships, lower impact materials, and circularity via our ongoing “Use Better, Use Longer, Use Again” campaign to extend product lifetimes and recyclability.

Environmental Data explained >

How we assess product sustainability >

Environmental footprint

Carbon footprint (kg CO2 eq, Total Life cycle)	**50**
Environmental Disclosure	**Product Environmental Profile**

Use Better

Materials and Substances

Packaging made with recycled cardboard	**No**
Packaging without single use plastic	**No**
EU RoHS Directive	**Not compliant**
California proposition 65	**WARNING: This product can expose you to chemicals including: Lead and lead compounds, which is known to the State of California to cause cancer and birth defects or other reproductive harm. For more information go to www.P65Warnings.ca.gov**
PVC free	**Yes**

Use Again

Repack and remanufacture

Circularity Profile	**No need of specific recycling operations**
Take-back	**No**

Technical Illustration

Dimensions

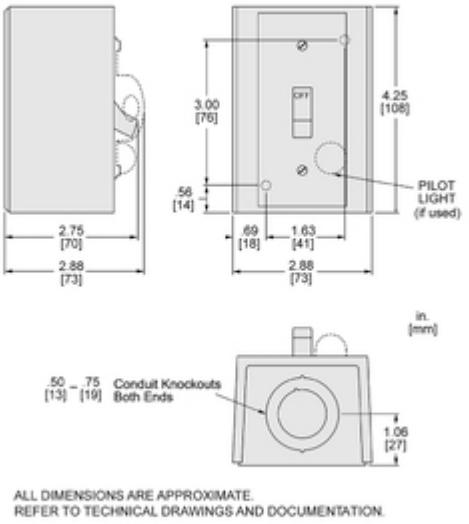

ALL DIMENSIONS ARE APPROXIMATE.
REFER TO TECHNICAL DRAWINGS AND DOCUMENTATION.

Technical Illustration

Wiring diagram

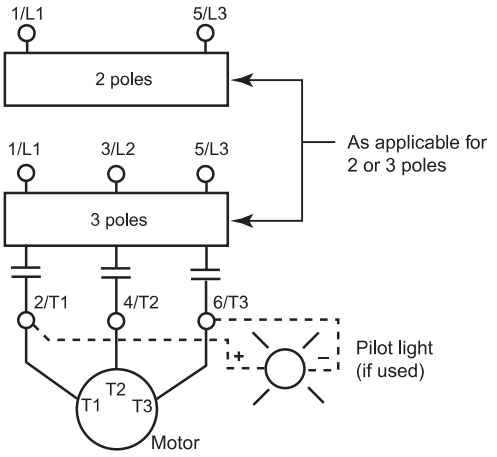

NOTE: The lamp is polarity sensitive in DC applications.