

Inductive sensor

NBB8-18GM60-UO-V12

- Cylindrical
- 8 mm flush
- 2-wire AC/DC

Dimensions

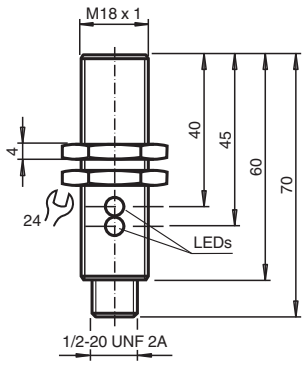

Technical Data

General specifications		
Switching function		Normally closed (NC)
Output type		Two-wire
Rated operating distance	s_n	8 mm
Installation		flush
Output polarity		AC/DC
Reduction factor r_{Al}		0.45
Reduction factor r_{Cu}		0.4
Reduction factor r_{304}		0.7
Output type		3-wire
Nominal ratings		
Switching frequency	f	30 Hz
Hysteresis	H	3 ... 15 % typ. 5 %
Reverse polarity protection		yes
Short-circuit protection		yes
Voltage drop	U_d	≤ 8 V
Rated operating current	I_e	4 ... 300 mA AC/DC
Off-state current	I_r	≤ 0.8 mA
Operating voltage indicator		LED, green
Switching state indicator		LED, yellow

Release date: 2025-08-21 Date of issue: 2025-08-21 Filename: 198079_eng.pdf

Technical Data

Functional safety related parameters		
$MTTF_d$		1004 a
Mission Time (T_M)		20 a
Diagnostic Coverage (DC)		0 %
Electrical specifications		
Rated operating voltage	U_e	20 ... 250 V AC/DC
Compliance with standards and directives		
Standard conformity		
Standards		EN IEC 60947-5-2
Standard conformity		
Standards		IEC / EN 60947-5-2:2004
Approvals and certificates		
UL approval		cULus Listed, General Purpose
CSA approval		cCSAus Listed, General Purpose
CCC approval		Certified by China Compulsory Certification (CCC)
Ambient conditions		
Ambient temperature		-25 ... 70 °C (-13 ... 158 °F)
Storage temperature		-40 ... 85 °C (-40 ... 185 °F)
Mechanical specifications		
Connection type		Connector plug
Housing material		brass, nickel-plated
Sensing face		PBT
Degree of protection		IP67
Connector		
Threading		1/2"-20 UN
Number of pins		3
Mass		62 g
Dimensions		
Length		70 mm
Diameter		18 mm

Connection Assignment

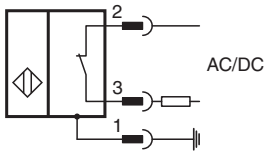

Release date: 2025-08-21 Date of issue: 2025-08-21 Filename: 198079_eng.pdf