HC-D15-SL-PLBK - Housing brackets

1414667

https://www.phoenixcontact.com/us/products/1414667

Please be informed that the data shown in this PDF document is generated from our online catalog. Please find the complete data in the user documentation. Our general terms of use for downloads are valid.



Replacement single locking latch, plastic, for HC-EVO-D15....BK and HC-STA-D15....AL housings

Commercial data

Item number	1414667
Packing unit	10 pc
Minimum order quantity	10 pc
Sales key	BF66
Product key	BF7APZ
Catalog page	Page 663 (C-2-2017)
GTIN	4055626031187
Weight per piece (including packing)	11.18 g
Weight per piece (excluding packing)	11.18 g
Customs tariff number	39269097
Country of origin	PL

Technical data

Product properties

Product type	Housing latches
Type	D15

Material specifications

Material	PA
Locking latch material	PA

Environmental and real-life conditions

Ambient conditions

Ambient temperature (operation)	-40 °C ... 125 °C

Mounting

Assembly instructions	For HC-EVO-D15...BK housing

Drawings

Dimensional drawing

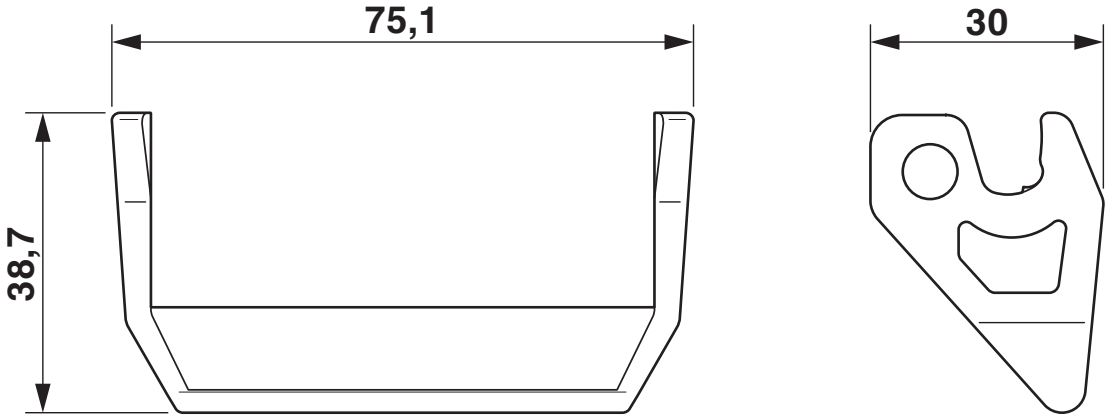

Dimensional drawing

Approvals

To download certificates, visit the product detail page: https://www.phoenixcontact.com/us/products/1414667

EAC
Approval ID: RU C-DE.AI30.B.01102

Classifications

ECLASS

ECLASS-11.0	27440192
ECLASS-12.0	27440192
ECLASS-13.0	27440192

ETIM

ETIM 9.0	EC002943

UNSPSC

UNSPSC 21.0	39121400

Environmental product compliance

EU RoHS

Fulfills EU RoHS substance requirements	Yes, No exemptions

China RoHS

Environment friendly use period (EFUP)	EFUP-E
	No hazardous substances above the limits

EU REACH SVHC

REACH candidate substance (CAS No.)	No substance above 0.1 wt%

Phoenix Contact 2024 © - all rights reserved
https://www.phoenixcontact.com

Phoenix Contact USA
586 Fulling Mill Road
Middletown, PA 17057, United States
(+717) 944-1300
info@phoenixcon.com