Data sheet

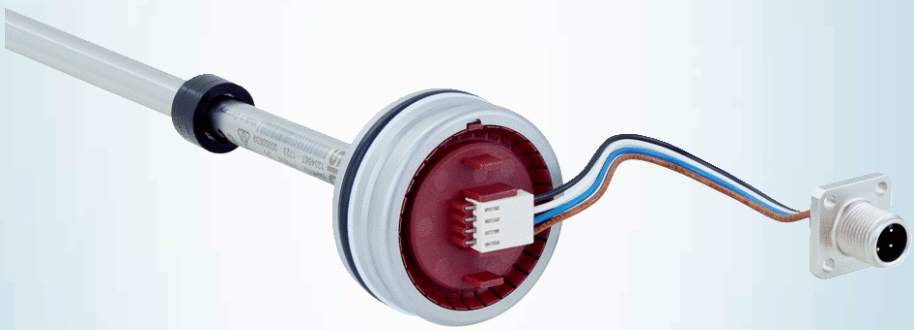

# MAX48N-12A10AC0150

MAX

MAGNETOSTRICTIVE LINEAR ENCODERS

SICK
Sensor Intelligence.



Illustration may differ

## Ordering information

| Type | part no. |
|---|---|
| MAX48N-12A10AC0150 | 1220610 |

Other models and accessories ➜ www.sick.com/MAX

## Detailed technical data

### Features

| | |
|---|---|
| **Items supplied** | Accessories not included with delivery, please order separately. |

### Safety-related parameters

| | |
|---|---|
| **$MTTF_D$ (mean time to dangerous failure)** | 69 years (EN ISO 13849-1) [1] |

[1] This product is a standard product and does not constitute a safety component as defined in the Machinery Directive. Calculation based on nominal load of components, average ambient temperature of the electronics 60 °C, frequency of use 8,760 h/a.
Every 2nd failure of an electronic component is considered hazardous.

### Performance

| | |
|---|---|
| **Type** | 48 mm installation housing – IN cylinder mounting |
| **Pressure pipe/End cap** | 10 mm / Flat |
| **Connection type** | Male connector, M12 type S (20x20 mm), 4-pin |
| **Direction of connection** | Radial |
| **Measuring range** | |
| Measured values | Positioning |
| Position (F.S.) | 0 mm ... 150 mm [1] |
| Null zone | 30 mm |
| Damping zone | 30 mm |
| **Operating conditions** | |
| Fluid temperature | –30 °C ... +95 °C [2] |
| Air humidity | 90 % (Condensation not permitted) |
| Operating pressure $P_N$ | 400 bar |
| Supply voltage | 24 V DC (8 ... 32 V DC) |
| Switch-on time | < 250 ms |
| Switch-on current | Typ. 5.0 A / 50 µs |
| Measuring frequency (internal) | 2 ms |
| Transmission rate (cycle time) | Steady |
| **Accuracy** | |
| Setpoint tolerance | ≤ ± 1 mm |

[1] F.S. = Full Scale (Measuring range).
[2] Depends on the maximum fluid temperature, the permissible temperature of the O-ring and the temperature-dependent signal quality of the position magnet.
[3] Hydraulic oil at operating temperature.

| | |
|---|---|
| Hysteresis | ± 0,1 mm |
| Repeatability | Typ. ± 0.2 mm |
| Linearity | Typ. ± 0.25 mm (measuring range 50 to 500 mm) [3] |
| | Typ. ± 0.04% F.S. (measuring range from 500 to 2,500 mm) |
| **Temperature drift** | |
| Warming up phase | Typ. ≤ ± 0.25 mm (2 min) |
| In the operational status | Typ. ± 0.25 mm (measuring range 50 to 500 mm) [3] |
| | Typ. ± 0.04% F.S. (measuring range from 500 to 2,500 mm) |

[1] F.S. = Full Scale (Measuring range).
[2] Depends on the maximum fluid temperature, the permissible temperature of the O-ring and the temperature-dependent signal quality of the position magnet.
[3] Hydraulic oil at operating temperature.

## Interfaces

| | |
|---|---|
| **Communication interface** | Analog |
| **Communication Interface detail** | Current |
| **Current output** | 4 mA ... 20 mA |

## Electronics

| | |
|---|---|
| **Connection type** | Male connector, M12 type S (20x20 mm), 4-pin |
| **PIN assignment** | 1=V DC; 2=n.c.; 3=GND; 4=SIG |
| **Electrical operation** | |
| Supply voltage | 24 V DC (8 ... 32 V DC) |
| Residual ripple | < 1% S-S |
| Power consumption | ≤ 1.25 W |
| Current consumption | ≤ 50 mA |
| Load resistance | 100 Ω ≤ RL ≤ 500 Ω |
| **Overvoltage protection during power-up (60 s)** | ≤ 36 V at all poles during power-up (60 s)<br>≤ 48 V To GND during power-up (60 s) |
| **Reverse polarity protection** | ≤ 36 V (at all poles) (ISO 16750-2) |
| **Insulation resistance** | Riso ≥ 10 MΩ, 60 s (ISO 16750-2) |
| **Dielectric strength** | 500 V DC, 0 V DC (60 s) to housing ($R_{ISO}$ ≥ 1 MΩ) (ISO 16750-2) |
| **Short-circuit protection** | $V_S$ – GND on housing |

## Mechanics

| | |
|---|---|
| **Dimensions** | |
| Housing | 48 mm, 48f7 for IN cylinder mounting – cylinder bore hole 48H8 |
| Ø pressure pipe | 10 mm |
| Ø O-ring | 40.87 mm x 3.53 mm |
| Ø support ring | 42.6 mm x 48 mm x 1.4 mm |
| M12 flange | M12 flange type S: DM 20x20 mm - hole pattern 14 mm (EN 61076-2-101) |
| Wire length | 80 mm |
| **Material** | |
| Housing | Stainless steel 1.4305 (AISI 303) |
| Pressure pipe | Stainless steel 1.4404, AISI 316L |
| O-ring | NBR 70 |

| | |
|---|---|
| Support ring | PTFE |
| M12 male connector | Glass fiber reinforced polyamide, nickel-/gold-plated brass contacts |
| M12 flange | Nickel-plated brass with O-ring (NBR) |
| Strands | PVC |

## Ambient data

| | |
|---|---|
| **EMC** | EU Directive 2014/30 / EU CE marking |
| Generic standards | EN 61000-6-2/61000-6-3 |
| Agricultural and forestry machinery | EN ISO 14982 |
| Transient pulses | ISO 7637-2/ISO 16750-2 |
| ESD (air and contact discharge) | ISO 61000-4-2 / ISO 10605 |
| **Vibration** | |
| Sine | 20 g (sine) / 55 ... 2,000 Hz / 3x24 h (IEC 60068-2-6 Fc) |
| Sine over noise | 18 g (r.m.s) / 10 ... 2,000 Hz / 3x36 h (IEC 60068-2-80 Fi) |
| Broadband noise (resonance peaks removed) | 20 g (r.m.s) / 10 ... 2,000 Hz / 3x48 h (IEC 60068-2-64 Fh) |
| **Pressure load** | |
| Operating pressure $P_N$ | 400 bar |
| Overload pressure $P_{max} = P_N \times 1.2$ | 480 bar |
| Test pressure $P_{stat} = P_N \times 1.5$ | 600 bar |
| **Temperature and air humidity** | |
| Storage | –20 °C ... +65 °C [1] |
| Operation (electronics) | –40 °C ... +105 °C [2] |
| Maximum air humidity | 90 % (Condensation not permitted) |
| **Enclosure rating** | |
| Housing | IP67 (EN 60529) |
| M12 male connector | IP69K (ISO 20653) [3] |

[1] R. H. 55%.
[2] Taking into account self-heating, generated through constant electrical operation with supply voltage.
[3] With suitable coupling (sealing through O-ring in M12 coupling nut).

## Certificates

| | |
|---|---|
| **EU declaration of conformity** | ✓ |
| **UK declaration of conformity** | ✓ |
| **ACMA declaration of conformity** | ✓ |
| **China-RoHS** | ✓ |

## Classifications

| | |
|---|---|
| **ECLASS 5.0** | 27270705 |
| **ECLASS 5.1.4** | 27270705 |
| **ECLASS 6.0** | 27270705 |
| **ECLASS 6.2** | 27270705 |
| **ECLASS 7.0** | 27270705 |
| **ECLASS 8.0** | 27270705 |
| **ECLASS 8.1** | 27270705 |

| | |
|---|---|
| **ECLASS 9.0** | 27270705 |
| **ECLASS 10.0** | 27270705 |
| **ECLASS 11.0** | 27270705 |
| **ECLASS 12.0** | 27274304 |
| **ETIM 5.0** | EC002544 |
| **ETIM 6.0** | EC002544 |
| **ETIM 7.0** | EC002544 |
| **ETIM 8.0** | EC002544 |
| **UNSPSC 16.0901** | 41111613 |

## Dimensional drawing MAX48

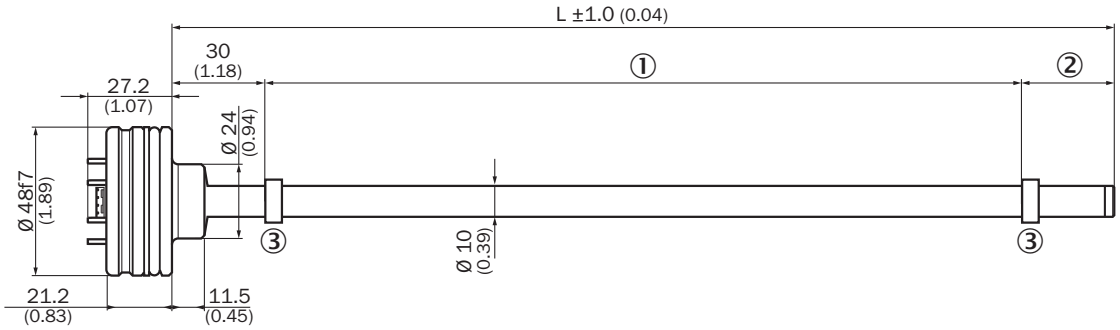


Dimensions in mm (inch)
① Measuring range
② damping zone
③ Position magnet

## Dimensional drawing Male connector M12

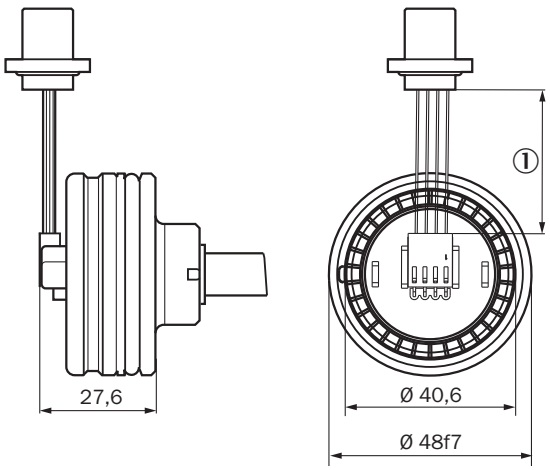


Dimensions in mm (inch)
① Wire length (according to type code)

## Dimensional drawing M12 connector type S/ flange - axial seal

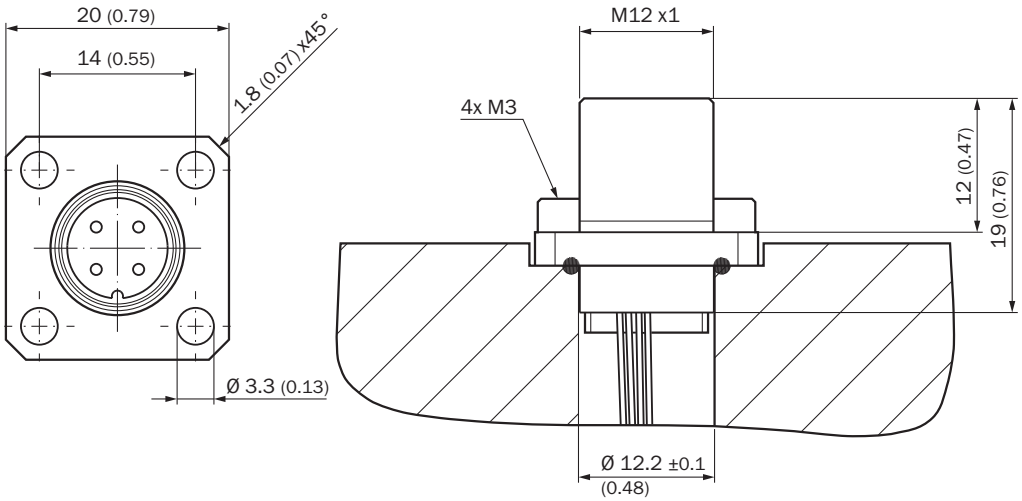


Dimensions in mm (inch)

## installation of position magnet

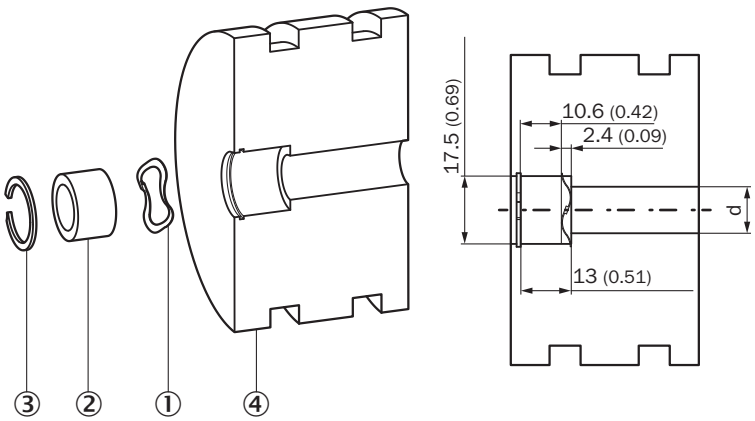


Dimensions in mm (inch)
① corrugated spring washer
② Position magnet
③ circlip
④ piston

## Position magnet

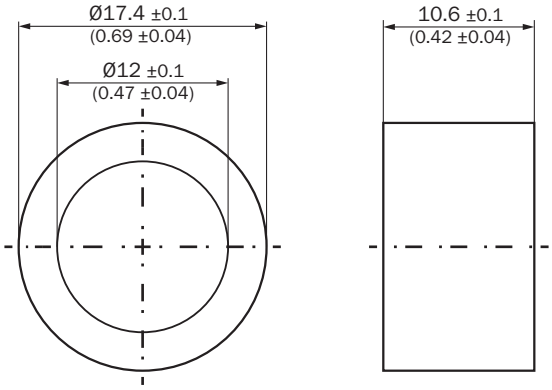


Dimensions in mm (inch)

## circlip

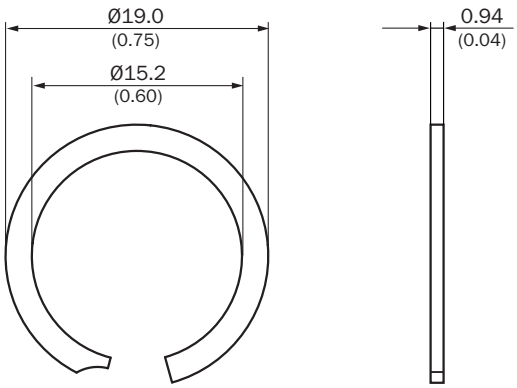


Dimensions in mm (inch)

## corrugated spring washer

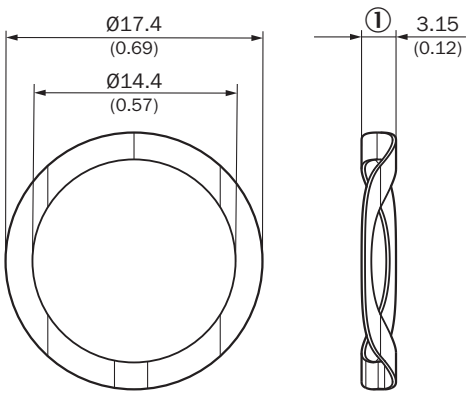


Dimensions in mm (inch)
① Free height

## Attachment specifications Installation space for cylinders

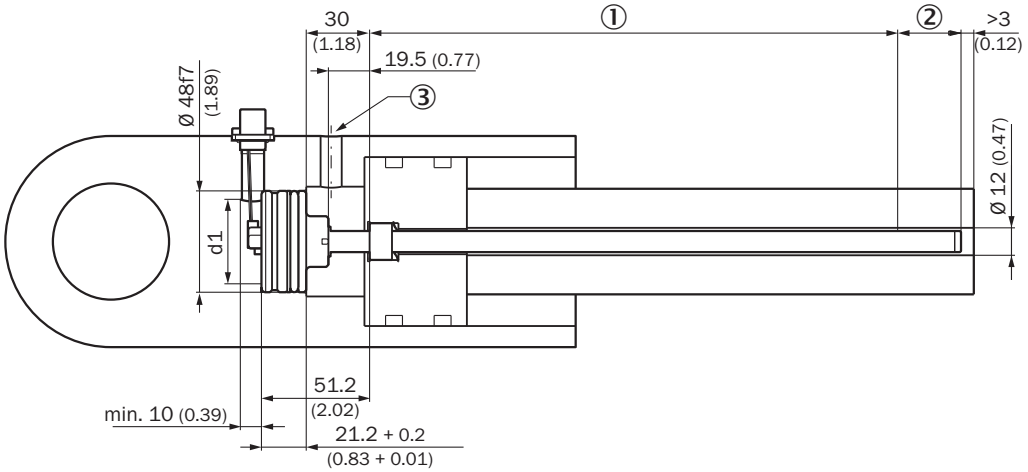


Please note the information in the operating instructions (d: 32 ≤ d1 ≤ 40).
① Measuring range
② damping zone
③ Hydraulic port

## PIN assignment

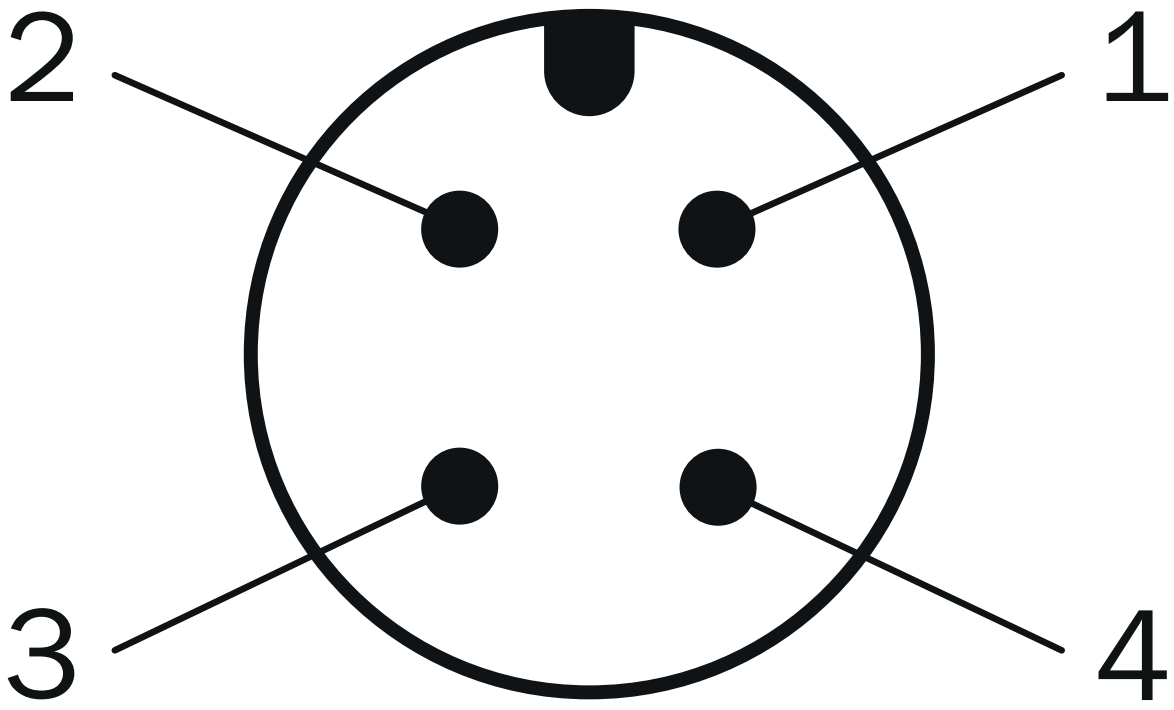


Pin assignment A (type S)
① V DC
② N.C.

③ GND
④ Signal

## Connection diagram

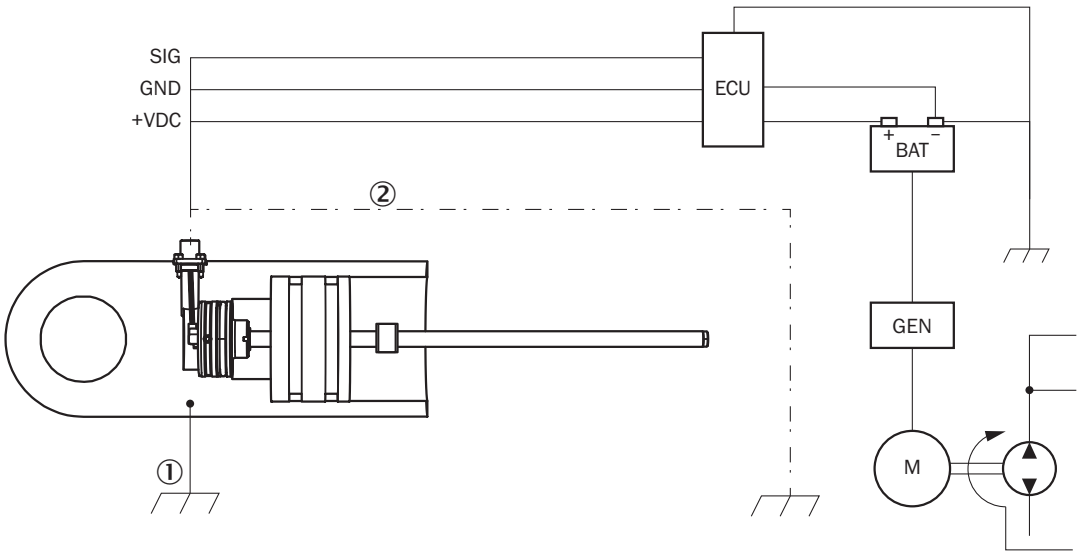


connection diagram
① Chassis GND
② Cable shielding (optional)

## Recommended accessories

Other models and accessories ➜ www.sick.com/MAX

| | Brief description | Type | part no. |
|---|---|---|---|
| Mounting systems | | | |
|  | • **Description:** Retaining ring for installing the position magnets in the piston of the hydraulic cylinder<br>• **Material:** Stainless steel<br>• **Details:** Stainless steel 1.4319<br>• **Packing unit:** 1 piece | BEF-MK-SR-01 | 2116437 |
|  | • **Description:** Retaining ring for installing the position magnets in the piston of the hydraulic cylinder<br>• **Material:** Stainless steel<br>• **Details:** Stainless steel 1.4319<br>• **Packing unit:** 5 pieces | BEF-MK-SR-05 | 2116438 |
|  | • **Description:** Retaining ring for installing the position magnets in the piston of the hydraulic cylinder<br>• **Material:** Stainless steel<br>• **Details:** Stainless steel 1.4319<br>• **Packing unit:** 10 pieces | BEF-MK-SR-10 | 2116439 |
|  | • **Description:** Retaining ring for installing the position magnets in the piston of the hydraulic cylinder<br>• **Material:** Stainless steel<br>• **Details:** Stainless steel 1.4319<br>• **Packing unit:** 50 pieces | BEF-MK-SR-50 | 2116440 |
|  | • **Description:** Corrugated spring washer for installing the position magnets in the piston of the hydraulic cylinder<br>• **Material:** Stainless steel<br>• **Details:** 1.4568 (17-7 PH Condition CH900)<br>• **Packing unit:** 1 piece | BEF-MK-WF-01 | 2116431 |
|  | • **Description:** Corrugated spring washer for installing the position magnets in the piston of the hydraulic cylinder<br>• **Material:** Stainless steel<br>• **Details:** 1.4568 (17-7 PH Condition CH900)<br>• **Packing unit:** 5 pieces | BEF-MK-WF-05 | 2116432 |
|  | • **Description:** Corrugated spring washer for installing the position magnets in the piston of the hydraulic cylinder<br>• **Material:** Stainless steel<br>• **Details:** 1.4568 (17-7 PH Condition CH900)<br>• **Packing unit:** 10 pieces | BEF-MK-WF-10 | 2116433 |
|  | • **Description:** Corrugated spring washer for installing the position magnets in the piston of the hydraulic cylinder<br>• **Material:** Stainless steel<br>• **Details:** 1.4568 (17-7 PH Condition CH900) | BEF-MK-WF-50 | 2116435 |

| | Brief description | Type | part no. |
|---|---|---|---|
| | • **Packing unit:** 50 pieces | | |
|  | • **Description:** Flange for M12 male connector, type S square flange (20 mm x 20 mm) with axial seal, 1 piece<br>• **Material:** Brass<br>• **Details:** Nickel-plated brass<br>• **Packing unit:** 1 piece | BEF-FA-M12S-01 | 2117507 |
|  | • **Description:** Flange for M12 male connector, type S square flange (20 mm x 20 mm) with axial seal, 5 pieces<br>• **Material:** Brass<br>• **Details:** Nickel-plated brass<br>• **Packing unit:** 5 pieces | BEF-FA-M12S-05 | 2117508 |
|  | • **Description:** Flange for M12 male connector, type S square flange (20 mm x 20 mm) with axial seal, 10 pieces<br>• **Material:** Brass<br>• **Details:** Nickel-plated brass<br>• **Packing unit:** 10 pieces | BEF-FA-M12S-10 | 2117509 |
| magnets | | | |
|  | • **Product segment:** Magnets<br>• **Product:** Position magnets<br>• **Description:** Position magnet for magnetostrictive linear encoders Installation: in hydraulic cylinder using corrugated spring washer SICK part no. 2116431 Temperature range: –30 °C ... +95 °C Dimensions: 17.4x12x10.6 mm Media: lubricants, hydraulic oils, no aggressive fluids (e.g., acids or bases) | MAG-0-174-01 | 2112714 |
|  | • **Product segment:** Magnets<br>• **Product:** Position magnets<br>• **Description:** Position magnet for magnetostrictive linear encoders Installation: in hydraulic cylinder using corrugated spring washer SICK part no. 2116431 Temperature range: –30 °C ... +95 °C Dimensions: 17.4x12x10.6 mm Media: lubricants, hydraulic oils, no aggressive fluids (e.g., acids or bases) | MAG-0-174-05 | 2112713 |
|  | • **Product segment:** Magnets<br>• **Product:** Position magnets<br>• **Description:** Position magnet for magnetostrictive linear encoders Installation: in hydraulic cylinder using corrugated spring washer SICK part no. 2116431 Temperature range: –30 °C ... +95 °C Dimensions: 17.4x12x10.6 mm Media: lubricants, hydraulic oils, no aggressive fluids (e.g., acids or bases) | MAG-0-174-10 | 2115045 |
|  | • **Product segment:** Magnets<br>• **Product:** Position magnets<br>• **Description:** Position magnet for magnetostrictive linear encoders Installation: in hydraulic cylinder using corrugated spring washer SICK part no. 2116431 Temperature range: –30 °C ... +95 °C Dimensions: 17.4x12x10.6 mm Media: lubricants, hydraulic oils, no aggressive fluids (e.g., acids or bases) | MAG-0-174-50 | 2112711 |

# SICK AT A GLANCE

SICK is one of the leading manufacturers of intelligent sensors and sensor solutions for industrial applications. A unique range of products and services creates the perfect basis for controlling processes securely and efficiently, protecting individuals from accidents and preventing damage to the environment.

We have extensive experience in a wide range of industries and understand their processes and requirements. With intelligent sensors, we can deliver exactly what our customers need. In application centers in Europe, Asia and North America, system solutions are tested and optimized in accordance with customer specifications. All this makes us a reliable supplier and development partner.

Comprehensive services complete our offering: SICK LifeTime Services provide support throughout the machine life cycle and ensure safety and productivity.

**For us, that is “Sensor Intelligence.”**

# WORLDWIDE PRESENCE:

Contacts and other locations –www.sick.com