Data sheet



# DFS60B-S1AA01024

## DFS60

INCREMENTAL ENCODERS

SICK
Sensor Intelligence.



Illustration may differ

## Ordering information

| Type | part no. |
|---|---|
| DFS60B-S1AA01024 | 1037197 |

Other models and accessories ➜ www.sick.com/DFS60

## Detailed technical data

### Safety-related parameters

| | |
|---|---|
| **$MTTF_D$ (mean time to dangerous failure)** | 300 years (EN ISO 13849-1) [1] |

[1] This product is a standard product and does not constitute a safety component as defined in the Machinery Directive. Calculation based on nominal load of components, average ambient temperature 40 °C, frequency of use 8760 h/a. All electronic failures are considered hazardous. For more information, see document no. 8015532.

### Performance

| | |
|---|---|
| **Pulses per revolution** | 1,024 [1] |
| **Measuring step** | 90°, electric/pulses per revolution |
| **Measuring step deviation at binary number of lines** | ± 0.008° |
| **Error limits** | ± 0.05° |

[1] See maximum revolution range.

### Interfaces

| | |
|---|---|
| **Communication interface** | Incremental |
| **Communication Interface detail** | TTL / RS-422 |
| **Number of signal channels** | 6-channel |
| **Initialization time** | 40 ms |
| **Output frequency** | ≤ 600 kHz |
| **Load current** | ≤ 30 mA |
| **Operating current** | 40 mA (without load) |

### Electronics

| | |
|---|---|
| **Connection type** | Male connector, M23, 12-pin, radial |
| **Supply voltage** | 4.5 ... 5.5 V |

[1] Short-circuit opposite to another channel, US or GND permissable for maximum 30 s.

| | |
|---|---|
| **Reference signal, number** | 1 |
| **Reference signal, position** | 90°, electric, logically gated with A and B |
| **Short-circuit protection of the outputs** | ✓ [1] |

[1] Short-circuit opposite to another channel, US or GND permissable for maximum 30 s.

## Mechanics

| | |
|---|---|
| **Mechanical design** | Solid shaft, Servo flange |
| **Shaft diameter** | 6 mmWith face |
| **Shaft length** | 10 mm |
| **Weight** | + 0.3 kg |
| **Shaft material** | Stainless steel |
| **Flange material** | Aluminum |
| **Housing material** | Aluminum die cast |
| **Start up torque** | 0.5 Ncm (+20 °C) |
| **Operating torque** | 0.3 Ncm (+20 °C) |
| **Permissible shaft loading** | 80 N (radial)<br>40 N (axial) |
| **Operating speed** | ≤ 9,000 $min^{-1}$ [1] |
| **Moment of inertia of the rotor** | 6.2 $gcm^2$ |
| **Bearing lifetime** | 3.6 x 10^10 revolutions |
| **Angular acceleration** | ≤ 500,000 $rad/s^2$ |

[1] Allow for self-heating of 3.3 K per 1,000 rpm when designing the operating temperature range.

## Ambient data

| | |
|---|---|
| **EMC** | According to EN 61000-6-2 and EN 61000-6-3 |
| **Enclosure rating** | IP67, Housing side, male connector (IEC 60529) [1]<br>IP65, shaft side (IEC 60529) |
| **Permissible relative humidity** | 90 % (Condensation not permitted) |
| **Operating temperature range** | –40 °C ... +100 °C [2]<br>–30 °C ... +100 °C [3] |
| **Storage temperature range** | –40 °C ... +100 °C, without package |
| **Resistance to shocks** | 70 g, 6 ms (EN 60068-2-27) |
| **Resistance to vibration** | 30 g, 10 Hz ... 2,000 Hz (EN 60068-2-6) |

[1] With mating connector fitted.
[2] Stationary position of the cable.
[3] Flexible position of the cable.

## Certificates

| | |
|---|---|
| **EU declaration of conformity** | ✓ |
| **UK declaration of conformity** | ✓ |
| **ACMA declaration of conformity** | ✓ |
| **Moroccan declaration of conformity** | ✓ |
| **China-RoHS** | ✓ |
| **cULus certificate** | ✓ |

| | |
|---|---|
| **Information according to Art. 3 of Data Act (Regulation EU 2023/2854)** | ✓ |

## Classifications

| | |
|---|---|
| **ECLASS 5.0** | 27270501 |
| **ECLASS 5.1.4** | 27270501 |
| **ECLASS 6.0** | 27270590 |
| **ECLASS 6.2** | 27270590 |
| **ECLASS 7.0** | 27270501 |
| **ECLASS 8.0** | 27270501 |
| **ECLASS 8.1** | 27270501 |
| **ECLASS 9.0** | 27270501 |
| **ECLASS 10.0** | 27270501 |
| **ECLASS 11.0** | 27270501 |
| **ECLASS 12.0** | 27270501 |
| **ETIM 5.0** | EC001486 |
| **ETIM 6.0** | EC001486 |
| **ETIM 7.0** | EC001486 |
| **ETIM 8.0** | EC001486 |
| **UNSPSC 16.0901** | 41112113 |

## Dimensional drawing

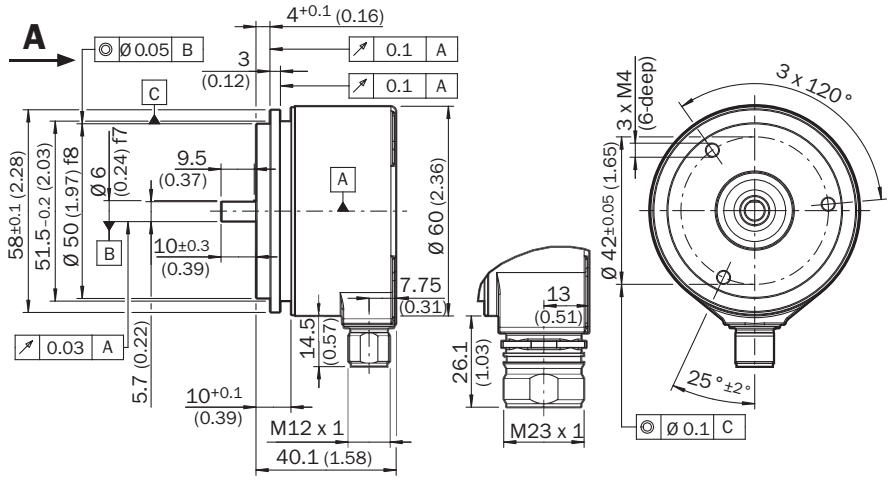


Dimensions in mm (inch)

## Mounting requirements for half-shell servo clamp

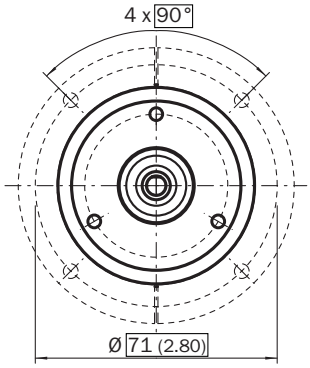


All dimensions in mm (inch)

part no. 2029165

## Mounting requirements for small servo clamp

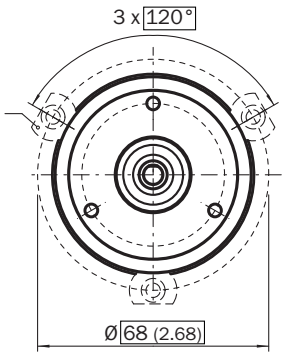


All dimensions in mm (inch)

part no. 2029166

## PIN assignment

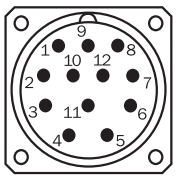


view of M23 male device connector on encoder

| PINMale connector M12, 8-pin | PINMale connector M23, 12-pin | Wire colors (cable connection) | TTL/HTL signal | Sin/Cos 1.0 $V_{PP}$ | Explanation |
|---|---|---|---|---|---|
| 1 | 6 | Brown | $\overline{A}$ | COS- | Signal wire |
| 2 | 5 | White | A | COS+ | Signal wire |
| 3 | 1 | Black | $\overline{B}$ | SIN- | Signal wire |
| 4 | 8 | Pink | B | SIN+ | Signal wire |
| 5 | 4 | Yellow | $\overline{Z}$ | $\overline{Z}$ | Signal wire |

| PINMale connector M12, 8-pin | PINMale connector M23, 12-pin | Wire colors (cable connection) | TTL/HTL signal | Sin/Cos 1.0 $V_{PP}$ | Explanation |
|---|---|---|---|---|---|
| 6 | 3 | Purple | Z | Z | Signal wire |
| 7 | 10 | Blue | GND | GND | Ground connection |
| 8 | 12 | Red | $+U_S$ | $+U_S$ | Supply voltage |
| - | 9 | - | N.c. | N.c. | Not assigned |
| - | 2 | - | N.c. | N.c. | Not assigned |
| - | 11 | - | N.c. | N.c. | Not assigned |
| - | 7 [1)] | Orange | 0-SET [1)] | N.c. | Set zero pulse[1)] |
| Screen | Screen | Screen | Screen | Screen | Screen connected to housing on encoder side. Connected to ground on control side. |

[1)]For electrical interfaces only: M, U, V, W with 0-SET function on PIN 7 on M23 plug. The 0-SET input is used to set the zero pulse to the current shaft position. If the 0-SET input is applied to US for longer than 250 ms after it has previously been open or applied to GND for at least 1,000 ms, the current shaft position is assigned zero pulse signal “Z”.

## signal outputs

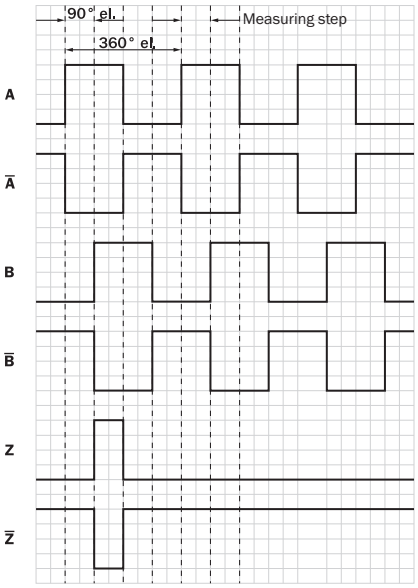


CW with view on the encoder shaft in direction “A”, compare dimensional drawing.

| Supply voltage | Output |
|---|---|
| 4,5 V ... 5,5 V | TTL |
| 10 V ... 32 V | TTL |
| 10 V ... 32 V | HTL |

## maximum revolution range

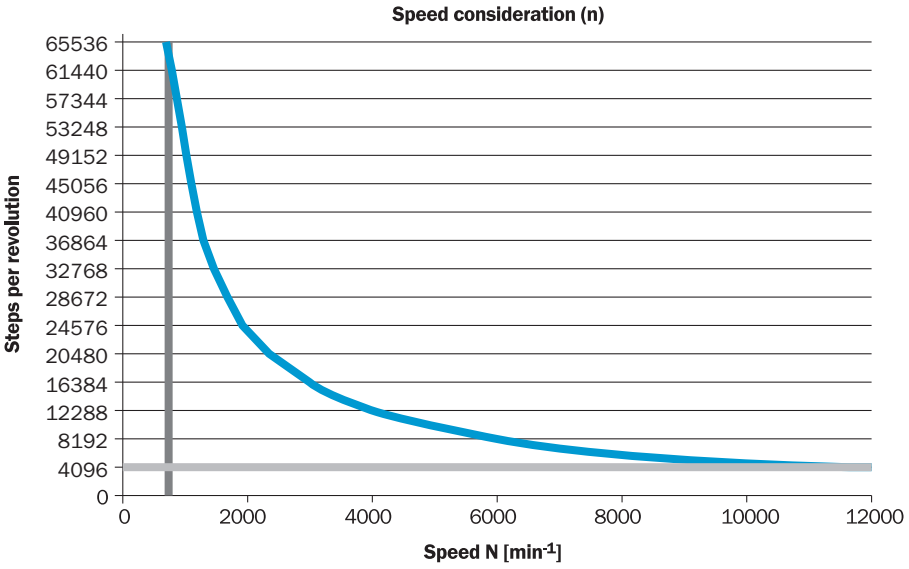

## Recommended accessories

Other models and accessories ➜ www.sick.com/DFS60

| | Brief description | Type | part no. |
|---|---|---|---|
| shaft adaptation | | | |
|  | • **Product segment:** Shaft adaptation<br>• **Product:** Shaft couplings<br>• **Description:** Bellows coupling, shaft diameter 6 mm / 10 mm, maximum shaft offset: radial ± 0.25 mm, axial ± 0.4 mm, angular +/- 4°; max. speed 10,000 rpm, –30 °C to +120 °C, max. torque 120 Ncm; material: stainless steel bellows, aluminum hub | KUP-0610-B | 5312982 |
|  | • **Product segment:** Shaft adaptation<br>• **Product:** Shaft couplings<br>• **Description:** Double loop coupling, shaft diameter 6 mm / 10 mm, max. shaft offset: radially +/- 2,5 mm, axially +/-3 mm, angle +/- 10 degrees;max. speed 3.000 rpm, –30 to +80 degrees Celsius, torsional spring stiffness of 25 Nm/rad | KUP-0610-D | 5326697 |
|  | • **Product segment:** Shaft adaptation<br>• **Product:** Shaft couplings<br>• **Description:** Spring washer coupling, shaft diameter 6 mm / 10 mm, Maximum shaft offset: radial +/- 0.3 mm, axial +/- 0.4 mm, angular +/- 2.5°; max. speed 12,000 rpm, –10° to +80 °C, max. torque 60 Ncm; material: aluminum flange, glass fiber-reinforced polyamide membrane and hardened steel coupling pin | KUP-0610-F | 5312985 |
|  | • **Product segment:** Shaft adaptation<br>• **Product:** Shaft couplings<br>• **Description:** Bar coupling, shaft diameter 6 mm / 10 mm, max. shaft offset: radial ± 0,3 mm, axial ± 0,3 mm, angular ± 3°; max. speed 10.000 rpm, –10° to +80 °C, max. torque: 80 Ncm, material: fiber-glass reinforced polyamide, aluminum hub | KUP-0610-S | 2056407 |
|  | • **Product segment:** Shaft adaptation<br>• **Product:** Shaft couplings<br>• **Description:** Claw coupling, shaft diameter 6 mm / 10 mm, damping element 80 shore blue, maximum shaft offset: radial ± 0.22 mm, axial ± 1 mm angular ± 1.3°, max. speed 19,000 rpm, angle of twist max. 10°, –30 °C to +80 °C, max. torque 800 Ncm, tightening torque of screws: ISO 4029 150 Ncm, material: aluminum flange, damping element: polyurethane | KUP-0610-J | 2127056 |
|  | • **Product segment:** Shaft adaptation<br>• **Product:** Shaft couplings<br>• **Description:** Bar coupling, shaft diameter 6 mm /8 mm, maximum shaft offset radial ± 0.3 mm, axial ± 0.2 mm, angle ± 3°, max. speed 10,000 rpm, torsion spring rigidity 38 Nm/wheel; material: fiber-glass reinforced polyamide, aluminum hub | KUP-0608-S | 5314179 |
| 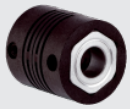 | • **Product segment:** Shaft adaptation<br>• **Product:** Shaft couplings<br>• **Description:** Cross-slotted coupling, shaft diameter 6 mm / 6 mm, maximum shaft offset: radial ± 0.3 mm, axial ± 0.2 mm, angle ± 3°; max. speed 10,000 rpm, –10° to +80 °C, max. torque 80 Ncm; material: fiber-glass reinforced polyamide, aluminum hub | KUP-0606-S | 2056406 |
|  | • **Product segment:** Shaft adaptation<br>• **Product:** Shaft couplings<br>• **Description:** Bellows coupling, shaft diameter 6 mm / 6 mm, maximum shaft offset: radial ± 0.25 mm, axial ± 0.4 mm, angular +/- 4°; max. speed 10,000 rpm, –30 °C to +120 °C, max. torque 120 Ncm; material: stainless steel bellows, aluminum hub | KUP-0606-B | 5312981 |

| | Brief description | Type | part no. |
|---|---|---|---|
| measuring wheels and measuring wheel mechanics | | | |
|  | • **Product segment:** Measuring wheels and measuring wheel mechanics<br>• **Product family:** Measuring wheels<br>• **Description:** Aluminum measuring wheel with studded polyurethane surface for 6 mm solid shaft, circumference 200 mm | BEF-MR06200APN | 4084747 |
|  | • **Product segment:** Measuring wheels and measuring wheel mechanics<br>• **Product family:** Measuring wheels<br>• **Description:** Aluminium measuring wheel with O-ring (NBR70) for 6 mm solid shaft, circumference 200 mm | BEF-MR006020R | 2055222 |
|  | • **Product segment:** Measuring wheels and measuring wheel mechanics<br>• **Product family:** Measuring wheels<br>• **Description:** Measuring wheel with O-ring (NBR70) for 6 mm solid shaft, circumference 300 mm | BEF-MR006030R | 2055634 |
|  | • **Product segment:** Measuring wheels and measuring wheel mechanics<br>• **Product family:** Measuring wheels<br>• **Description:** Aluminium measuring wheel with O-ring (NBR70) for 6 mm solid shaft, circumference 500 mm | BEF-MR006050R | 2055225 |
|  | • **Product segment:** Measuring wheels and measuring wheel mechanics<br>• **Product family:** Measuring wheels<br>• **Description:** Aluminum measuring wheel with cross-knurled surface for 6 mm solid shaft, circumference 200 mm | BEF-MR06200AK | 4084745 |
|  | • **Product segment:** Measuring wheels and measuring wheel mechanics<br>• **Product family:** Measuring wheels<br>• **Description:** Aluminum measuring wheel with smooth polyurethane surface for 6 mm solid shaft, circumference 200 mm | BEF-MR06200AP | 4084746 |
|  | • **Product segment:** Measuring wheels and measuring wheel mechanics<br>• **Product family:** Measuring wheels<br>• **Description:** Aluminum measuring wheel with ridged polyurethane surface for 6 mm solid shaft, circumference 200 mm | BEF-MR06200APG | 4084748 |

| | Brief description | Type | part no. |
|---|---|---|---|
| Mounting systems | | | |
|  | • **Description:** Bearing block for servo and face mount flange encoder. The heavy-duty bearing block is used to absorb very large radial and axial shaft loads. Particularly when using belt pulleys, chain sprockets, friction wheels. Operating speed max. 4,000 rpm^-1, axial shaft load 150 N, radial shaft load 250 N, bearing service life 3.6 x 10^9 revolutions | BEF-FA-LB1210 | 2044591 |
| | • **Description:** Mounting kit for servo flange encoder on the bearing block, 1 bar coupling SKPS 1520 06/06 1 hexagon socket wrench SW1.5 DIN 911, 3 mounting eccentric BEMN 1242 49 3 screws M4 x 10 DIN 912,1 hexagon socket wrench SW3 DIN 911<br>• **Items supplied:** 1 bar coupling SKPS 1520 06/06 1 hexagon socket wrench SW1.5 DIN 911, 3 mounting eccentric BEMN 1242 49 3 screws M4 x 10 DIN 912, 1 hexagon socket wrench SW3 DIN 911 | BEF-MK-LB | 5320872 |
|  | • **Description:** Servo clamps, large, for servo flange (clamps, eccentric fastener), 3 pcs, without mounting material<br>• **Items supplied:** Without mounting hardware | BEF-WK-SF | 2029166 |
|  | • **Description:** Mounting bell for encoder with servo flange, 50 mm spigot<br>• **Items supplied:** Mounting kit included | BEF-MG-50 | 5312987 |

| | Brief description | Type | part no. |
|---|---|---|---|
| connectors and cables | | | |
|  | • **Connection type head A:** Female connector, M23, 12-pin, straight<br>• **Connection type head B:** Flying leads<br>• **Signal type:** Incremental<br>• **Cable:** 2 m, 11-wire, PUR<br>• **Description:** Incremental, shielded | DOL-2312-G02MLA3 | 2030682 |
|  | • **Connection type head A:** Female connector, M23, 12-pin, straight<br>• **Connection type head B:** Flying leads<br>• **Signal type:** Incremental<br>• **Cable:** 7 m, 11-wire, PUR<br>• **Description:** Incremental, shielded | DOL-2312-G07MLA3 | 2030685 |
|  | • **Connection type head A:** Female connector, M23, 12-pin, straight<br>• **Connection type head B:** Flying leads<br>• **Signal type:** Incremental<br>• **Cable:** 10 m, 11-wire, PUR<br>• **Description:** Incremental, shielded | DOL-2312-G10MLA3 | 2030688 |
|  | • **Connection type head A:** Female connector, M23, 12-pin, straight<br>• **Connection type head B:** Flying leads<br>• **Signal type:** Incremental<br>• **Cable:** 15 m, 11-wire, PUR<br>• **Description:** Incremental, shielded | DOL-2312-G15MLA3 | 2030692 |
|  | • **Connection type head A:** Female connector, M23, 12-pin, straight<br>• **Connection type head B:** Flying leads<br>• **Signal type:** Incremental<br>• **Cable:** 20 m, 11-wire, PUR<br>• **Description:** Incremental, shielded | DOL-2312-G20MLA3 | 2030695 |
|  | • **Connection type head A:** Female connector, M23, 12-pin, straight<br>• **Connection type head B:** Flying leads<br>• **Signal type:** Incremental<br>• **Cable:** 25 m, 11-wire, PUR<br>• **Description:** Incremental, shielded | DOL-2312-G25MLA3 | 2030699 |
|  | • **Connection type head A:** Female connector, M23, 12-pin, straight<br>• **Connection type head B:** Flying leads<br>• **Signal type:** Incremental<br>• **Cable:** 30 m, 11-wire, PUR<br>• **Description:** Incremental, shielded | DOL-2312-G30MLA3 | 2030702 |
|  | • **Connection type head A:** Female connector, M23, 12-pin, straight<br>• **Connection type head B:** Flying leads<br>• **Signal type:** Incremental<br>• **Cable:** 1.5 m, 12-wire, PUR, halogen-free<br>• **Description:** Incremental, shielded | DOL-2312-G1M5MA3 | 2029212 |
|  | • **Connection type head A:** Female connector, M23, 12-pin, straight<br>• **Connection type head B:** Flying leads<br>• **Signal type:** Incremental<br>• **Cable:** 3 m, 12-wire, PUR, halogen-free<br>• **Description:** Incremental, shielded | DOL-2312-G03MMA3 | 2029213 |
|  | • **Connection type head A:** Female connector, M23, 12-pin, straight<br>• **Connection type head B:** Flying leads<br>• **Signal type:** Incremental<br>• **Cable:** 5 m, 12-wire, PUR, halogen-free<br>• **Description:** Incremental, shielded | DOL-2312-G05MMA3 | 2029214 |
|  | • **Connection type head A:** Female connector, M23, 12-pin, straight<br>• **Connection type head B:** Flying leads<br>• **Signal type:** Incremental<br>• **Cable:** 10 m, 12-wire, PUR, halogen-free<br>• **Description:** Incremental, shielded | DOL-2312-G10MMA3 | 2029215 |
|  | • **Connection type head A:** Female connector, M23, 12-pin, straight<br>• **Connection type head B:** Flying leads<br>• **Signal type:** Incremental<br>• **Cable:** 20 m, 12-wire, PUR, halogen-free<br>• **Description:** Incremental, shielded | DOL-2312-G20MMA3 | 2029216 |
|  | • **Connection type head A:** Female connector, M23, 12-pin, straight<br>• **Connection type head B:** Flying leads<br>• **Signal type:** Incremental<br>• **Cable:** 30 m, 12-wire, PUR, halogen-free | DOL-2312-G30MMA3 | 2029217 |

| | Brief description | Type | part no. |
|---|---|---|---|
| | • **Description:** Incremental, shielded | | |
|  | • **Connection type head A:** Female connector, M23, 12-pin, straight, A-coded<br>• **Signal type:** HIPERFACE®, SSI, Incremental<br>• **Description:** HIPERFACE®, shieldedSSIIncremental<br>• **Connection systems:** Solder connection | DOS-2312-G02 | 2077057 |
|  | • **Connection type head A:** Female connector, M23, 12-pin, angled, A-coded<br>• **Signal type:** HIPERFACE®, SSI, Incremental<br>• **Description:** HIPERFACE®, shieldedSSIIncremental<br>• **Connection systems:** Solder connection | DOS-2312-W01 | 2072580 |

# SICK AT A GLANCE

SICK is one of the leading manufacturers of intelligent sensors and sensor solutions for industrial applications. A unique range of products and services creates the perfect basis for controlling processes securely and efficiently, protecting individuals from accidents and preventing damage to the environment.

We have extensive experience in a wide range of industries and understand their processes and requirements. With intelligent sensors, we can deliver exactly what our customers need. In application centers in Europe, Asia and North America, system solutions are tested and optimized in accordance with customer specifications. All this makes us a reliable supplier and development partner.

Comprehensive services complete our offering: SICK LifeTime Services provide support throughout the machine life cycle and ensure safety and productivity.

**For us, that is “Sensor Intelligence.”**

# WORLDWIDE PRESENCE:

Contacts and other locations –www.sick.com