Single-Channel High-Side Gate Drive IC

FAN73611

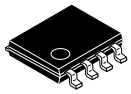

SOIC8
(8–SOP)
CASE 751EG

Description

The FAN73611 is a monolithic high−side gate drive IC that can drive MOSFETs and IGBTs operating up to +600 V. **onsemi**'s high−voltage process and commonmode noise canceling techniques provide stable operation of the high−side driver under high dv/dt noise circumstances. An advanced level−shift circuit offers high−side gate driver operation up to V_S = −9.8 V (typical) for V_{BS} = 15 V. The UVLO circuits prevents malfunction when V_{DD} or V_{BS} is lower than the specified threshold voltage. The output drivers typically source/sink 250 mA/500 mA; respectively, which is suitable for Plasma Display Panel (PDP) application, motor drive inverter, and switching mode power supply applications.

Features

- Floating Channel of Bootstrap Operation to +600 V
- 250 mA / 500 mA Sourcing/Sinking Current Driving Capability
- Common−Mode dv/dt Noise−Cancelling Circuit
- 3.3 V and 5 V Input Logic Compatible
- Output In Phase with Input Signal
- Under−Voltage Lockout for V_{DD} and V_{BS}
- 8−Lead Small Outline Package (SOP)
- This is a Pb−Free Device

Applications

- Electronic Ballast
- Switching−Mode Power Supply (SMPS)

Related Resources

- AN−6076 – Design and Application Guide of Bootstrap Circuit for High−Voltage Gate−Drive IC
- AN−9052 – Design Guide for Selection of Bootstrap Components
- AN−8102 – Recommendations to Avoid Short Pulse Width Issues in HVIC Gate Driver Applications

MARKING DIAGRAM

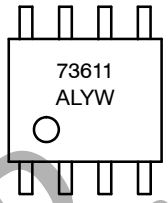

73611 = Device Code
A = Assembly Site
L = Wafer Lot Number
YW = Assembly Start Week

ORDERING INFORMATION

See detailed ordering and shipping information on page 11 of this data sheet.

DISCONTINUED
THIS DEVICE IS NOT RECOMMENDED FOR NEW DESIGN
PLEASE CONTACT YOUR onsemi
REPRESENTATIVE FOR INFORMATION

© Semiconductor Components Industries, LLC, 2010

TYPICAL APPLICATION DIAGRAMS

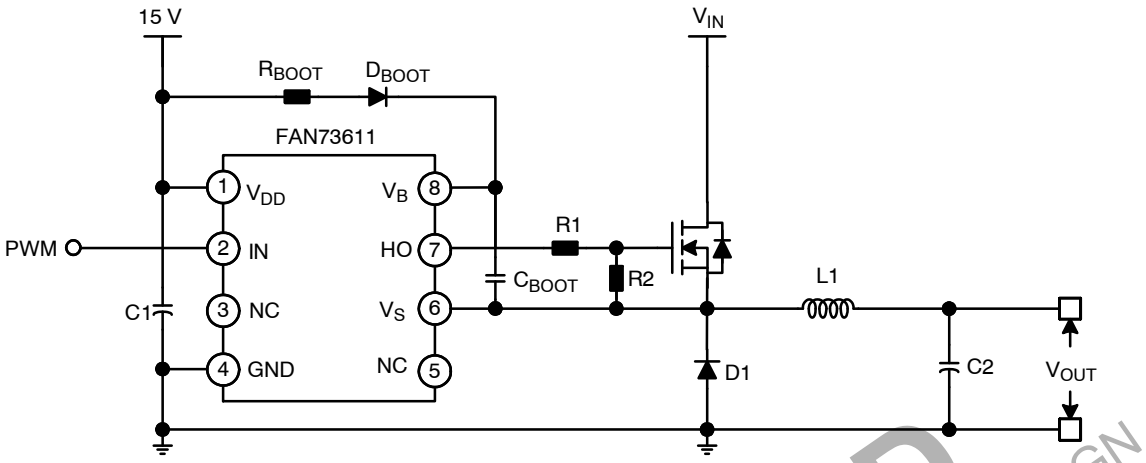

Figure 1. Step−Down (Buck) DC−DC Converter Application

INTERNAL BLOCK DIAGRAM

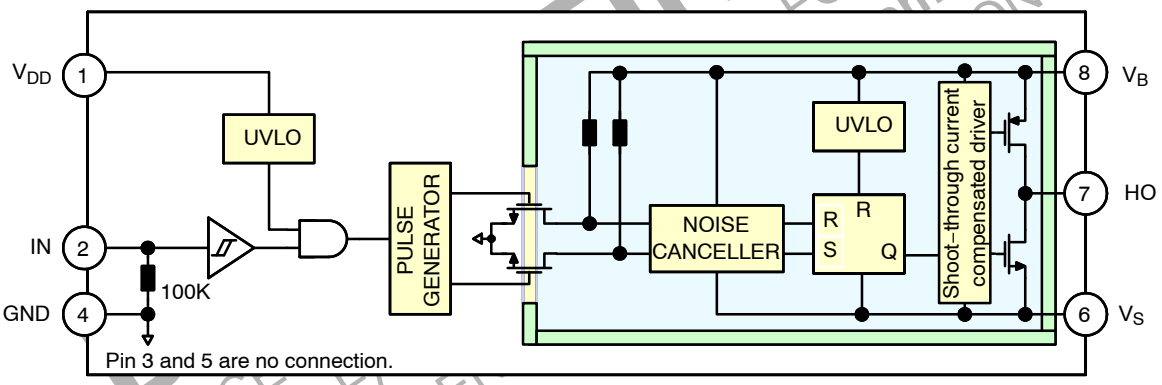

Figure 2. Functional Block Diagram

THIS DEVICE ... FOR NEW DESIGN ... PLEA... REPRESEN...

PIN CONFIGURATION

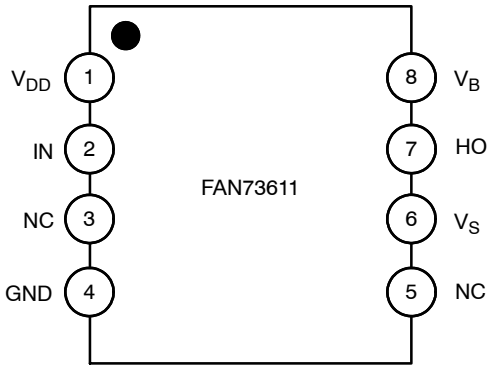

Figure 3. Pin Configuration (Top View)

PIN DEFINITIONS

Pin No.	Name	Description
1	V_{DD}	Supply Voltage
2	IN	Logic Input for High−Side Gate Driver Output
3	NC	No Connection
4	GND	Ground
5	NC	No Connection
6	V_S	High−Voltage Floating Supply Return
7	HO	High−Side Driver Output
8	V_B	High−Side Floating Supply

DISCONTINUED
THIS DEVICE IS NOT RECOMMENDED FOR NEW DESIGN
PLEASE CONTACT YOUR onsemi
REPRESENTATIVE FOR INFORMATION

ABSOLUTE MAXIMUM RATINGS (T_A = 25°C, unless otherwise specified.)

Symbol	Parameter	Min	Max	Unit
V_S	High−Side Floating Offset Voltage	V_B − 25	V_B + 0.3	V
V_B	High−Side Floating Supply Voltage	−0.3	625.0	V
V_{HO}	High−Side Floating Output Voltage	V_S − 0.3	V_B + 0.3	V
V_{DD}	Low−Side and Logic Supply Voltage	−0.3	25.0	V
V_{IN}	Logic Input Voltage	−0.3	V_{DD} + 0.3	V
dV_S/dt	Allowable Offset Voltage Slew Rate	−	±50	V/ns
P_D	Power Dissipation (Notes 1, 2, 3)	−	0.625	W
θ_{JA}	Thermal Resistance	−	200	°C/W
T_J	Junction Temperature	−55	+150	°C
T_{STG}	Storage Temperature	−55	+150	°C

Stresses exceeding those listed in the Maximum Ratings table may damage the device. If any of these limits are exceeded, device functionality should not be assumed, damage may occur and reliability may be affected.

1. Mounted on 76.2 x 114.3 x 1.6 mm PCB (FR−4 glass epoxy material).
2. Refer to the following standards:
   JESD51−2: Integral circuits thermal test method environmental conditions, natural convection, and
   JESD51−3: Low effective thermal conductivity test board for leaded surface mount packages
3. Do not exceed power dissipation (P_D) under any circumstances.

RECOMMENDED OPERATING RATINGS

Symbol	Parameter	Min	Max	Unit
V_B	High−Side Floating Supply Voltage	V_S + 10	V_S + 20	V
V_S	High−Side Floating Supply Offset Voltage	6 − V_{DD}	600	V
V_{HO}	High−Side Output Voltage	V_S	V_B	V
V_{IN}	Logic Input Voltage	GND	V_{DD}	V
V_{DD}	Supply Voltage	10	20	V
T_A	Operating Ambient Temperature	−40	+125	°C

Functional operation above the stresses listed in the Recommended Operating Ranges is not implied. Extended exposure to stresses beyond the Recommended Operating Ranges limits may affect device reliability.

DISCONTINUED
THIS DEVICE IS NOT RECOMMENDED FOR NEW DESIGN
PLEASE CONTACT YOUR onsemi
REPRESENTATIVE FOR INFORMATION

ELECTRICAL CHARACTERISTICS (V_{BIAS} (V_{DD}, V_{BS}) = 15.0 V and T_A = 25°C unless otherwise specified. The V_{IN} and I_{IN} parameters are referenced to GND. The V_O and I_O parameters are relative to V_S and are applicable to the respective outputs HO.)

Symbol	Parameter	Test Condition	Min	Typ	Max	Unit
POWER SUPPLY SECTION						
I_{QDD}	Quiescent V_{DD} Supply Current	V_{IN} = 0 V or 5 V, C_{LOAD} = 1000 pF	–	80	140	μA
I_{PDD}	Operating V_{DD} Supply Current	C_{LOAD} = 1000 pF, f_{IN} = 20 kHz, RMS value	–	80	160	μA
V_{DDUV+} V_{BSUV+}	V_{DD} and V_{BS} Supply Under−Voltage Positive Going Threshold Voltage	V_{DD} = Sweep, V_{BS} = Sweep	7.8	8.8	9.8	V
V_{DDUV-} V_{BSUV-}	V_{DD} and V_{BS} Supply Under−Voltage Negative Going Threshold Voltage	V_{DD} = Sweep, V_{BS} = Sweep	7.3	8.3	9.3	V
V_{DDHYS} V_{BSHYS}	V_{DD} and V_{BS} Supply Under−Voltage Lockout Hysteresis Voltage	V_{DD} = Sweep, V_{BS} = Sweep	–	0.5	–	V
I_{LK}	Offset Supply Leakage Current	V_B = V_S = 600 V	–	–	10	μA
I_{QBS}	Quiescent V_{BS} Supply Current	V_{IN} = 0 V or 5 V, C_{LOAD} = 1000 pF		60	100	μA
I_{PBS}	Operating V_{BS} Supply Current	C_{LOAD} = 1000 pF, f_{IN} = 20 kHz, RMS value		420	600	μA
INPUT LOGIC SECTION						
V_{IH}	Logic “1” Input Voltage		2.5	–	–	V
V_{IL}	Logic “0” Input Voltage		–	–	0.8	V
I_{IN+}	Logic Input High Bias Current	V_{IN} = 5 V	–	50	75	μA
I_{IN-}	Logic Input Low Bias Current	V_{IN} = 0 V	–	–	2	μA
R_{IN}	Input Pull−Down Resistance		60	100	–	kΩ
GATE DRIVE OUTPUT SECTION						
V_{OH}	High Level Output Voltage (V_{BIAS} − V_O)	No Load	–	–	0.1	V
V_{OL}	Low Level Output Voltage	No Load	–	–	0.1	V
I_{O+}	Output High, Short−Circuit Pulsed Current	V_{HO} = 0 V, V_{IN} = 5 V, PW ≤ 10 μs	200	250	–	mA
I_{O-}	Output Low, Short−Circuit Pulsed Current	V_{HO} = 15 V, V_{IN} = 0 V, PW ≤ 10 μs	400	500	–	mA
V_S	Allowable Negative V_S Pin Voltage for IN Signal Propagation to HO	V_{BS} = 15 V	–	−9.8	−7.0	V

Product parametric performance is indicated in the Electrical Characteristics for the listed test conditions, unless otherwise noted. Product performance may not be indicated by the Electrical Characteristics if operated under different conditions.

DYNAMIC ELECTRICAL CHARACTERISTICS (V_{DD} = V_{BS} = 15 V, C_{LOAD} = 1000 pF, and T_A = 25°C, unless otherwise specified.)

Symbol	Parameter	Test Condition	Min	Typ	Max	Unit
t_{on}	Turn−on Propagation Delay Time	V_S = 0 V	70	120	170	ns
t_{off}	Turn−off Propagation Delay Time	V_S = 0 V	70	120	170	ns
t_r	Turn−on Rise Time		–	70	140	ns
t_f	Turn−off Fall Time		–	30	60	ns

Product parametric performance is indicated in the Electrical Characteristics for the listed test conditions, unless otherwise noted. Product performance may not be indicated by the Electrical Characteristics if operated under different conditions.

DISCONTINUED
THIS DEVICE IS NOT RECOMMENDED FOR NEW DESIGN
PLEASE CONTACT YOUR onsemi
REPRESENTATIVE FOR INFORMATION

TYPICAL CHARACTERISTICS

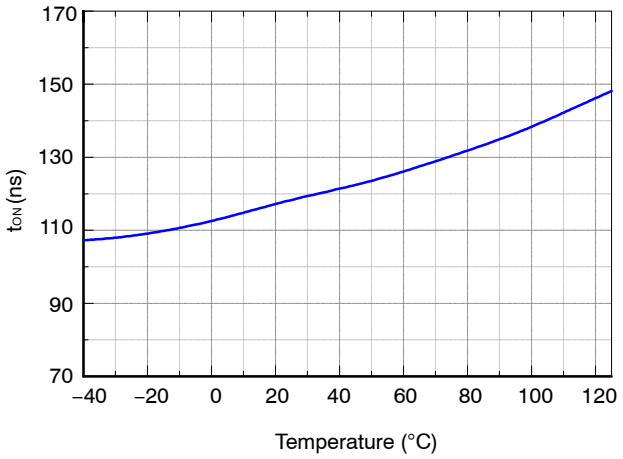

Figure 4. Turn−On Propagation Delay vs. Supply Voltage

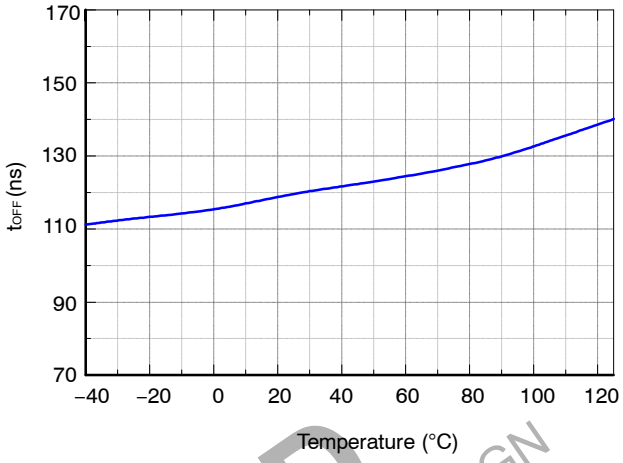

Figure 5. Turn−Off Propagation Delay vs. Temperature

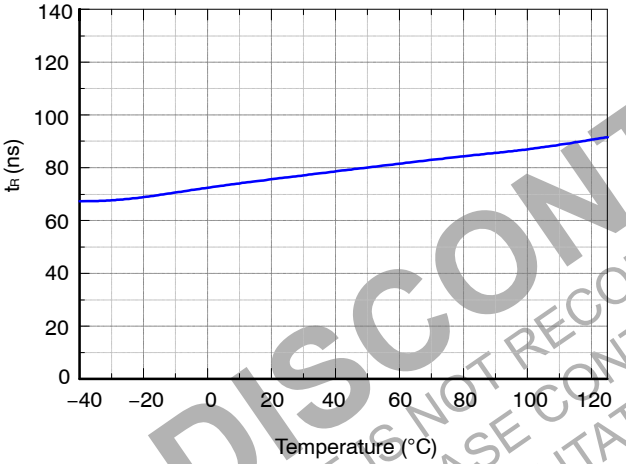

Figure 6. Turn−On Rise Time vs. Temperature

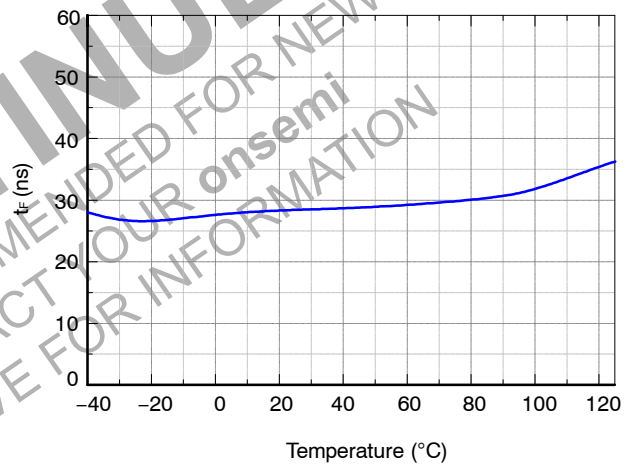

Figure 7. Turn−Off Fall Time vs. Temperature

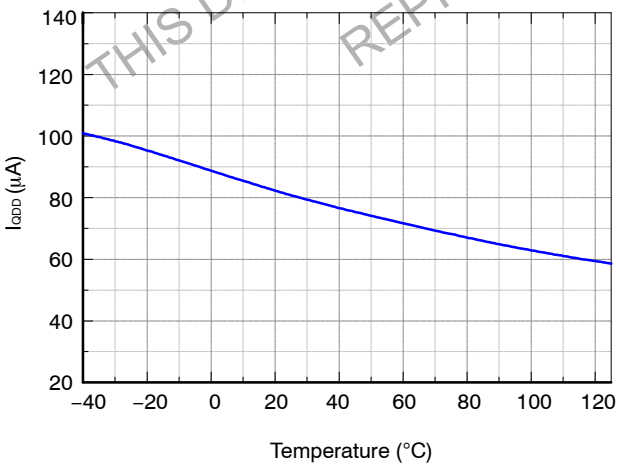

Figure 8. Quiescent V_{DD} Supply Current vs. Temperature

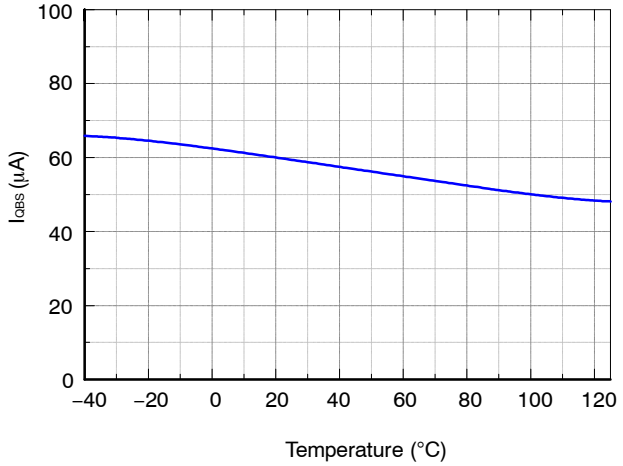

Figure 9. Quiescent V_{BS} Supply Current vs. Temperature

DISCONTINUED
THIS DEVICE IS NOT RECOMMENDED FOR NEW DESIGN
PLEASE CONTACT YOUR onsemi
REPRESENTATIVE FOR INFORMATION

TYPICAL CHARACTERISTICS (Continued)

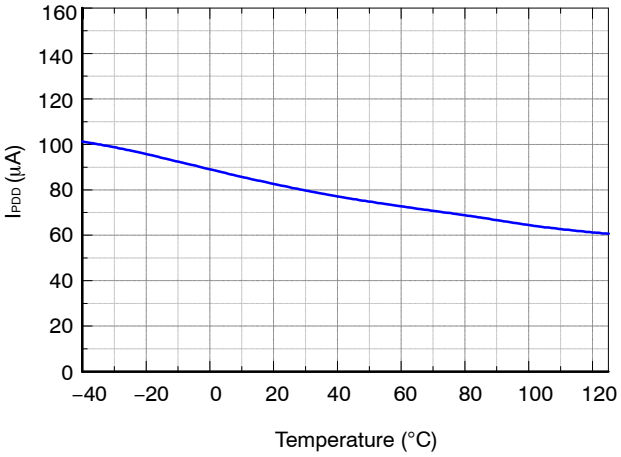

Figure 10. Operating V_{DD} Supply Current vs. Temperature

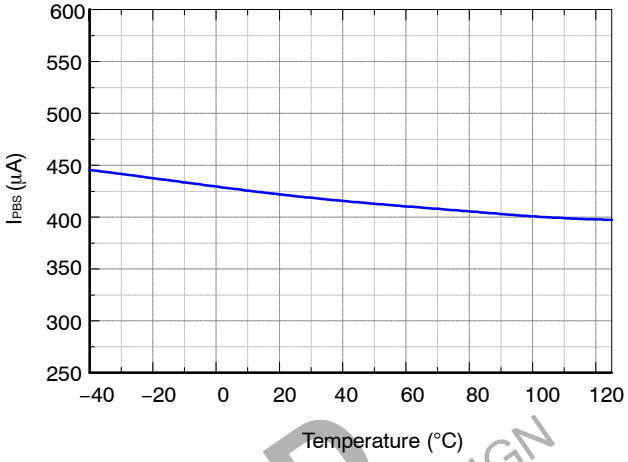

Figure 11. Operating V_{BS} Supply Current vs. Temperature

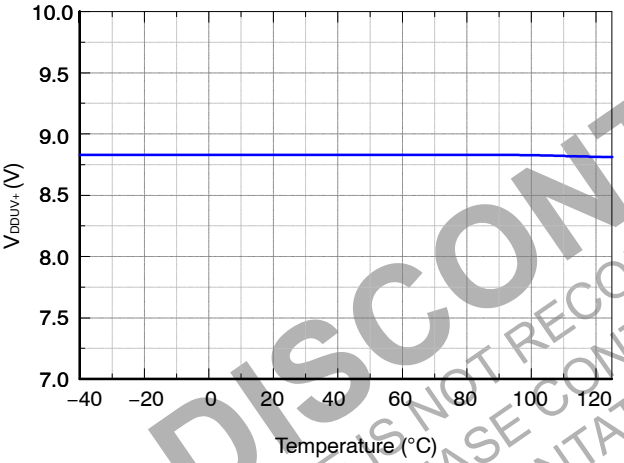

Figure 12. V_{DD} UVLO+ vs. Temperature

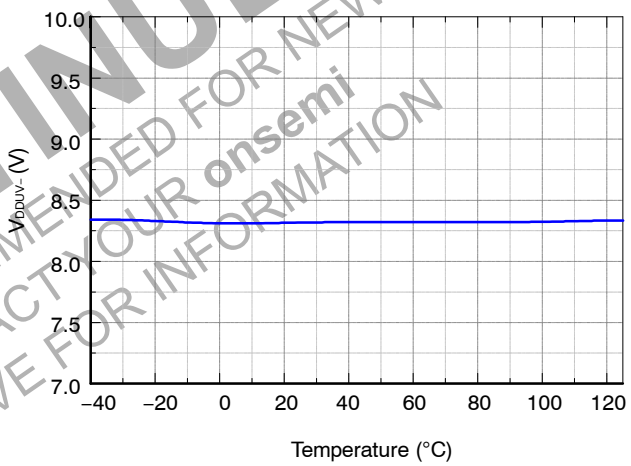

Figure 13. V_{DD} UVLO− vs. Temperature

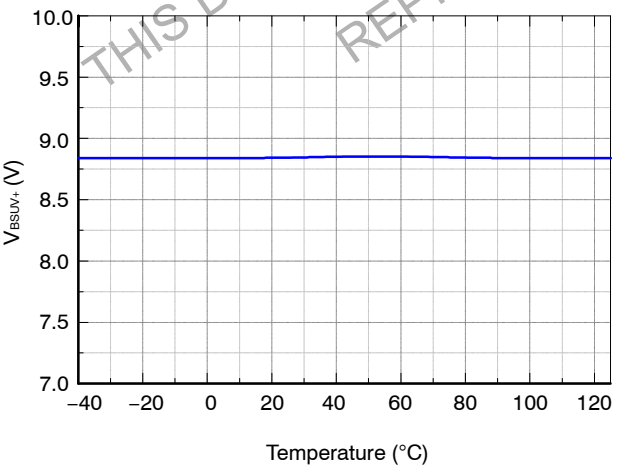

Figure 14. V_{BS} UVLO+ vs. Temperature

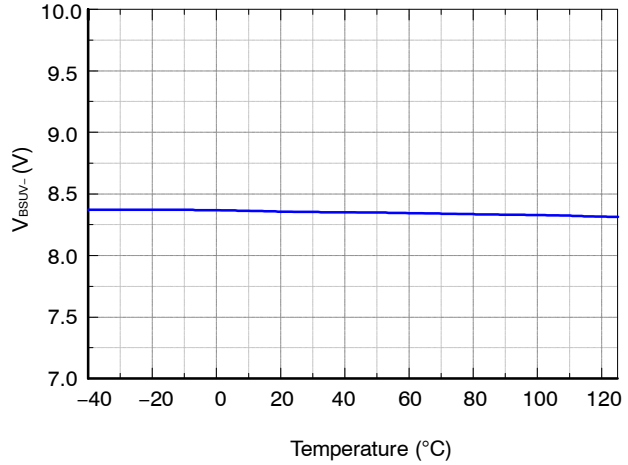

Figure 15. V_{BS} UVLO− vs. Temperature

DISCONTINUED
THIS DEVICE IS NOT RECOMMENDED FOR NEW DESIGN
PLEASE CONTACT YOUR onsemi
REPRESENTATIVE FOR INFORMATION

TYPICAL CHARACTERISTICS (Continued)

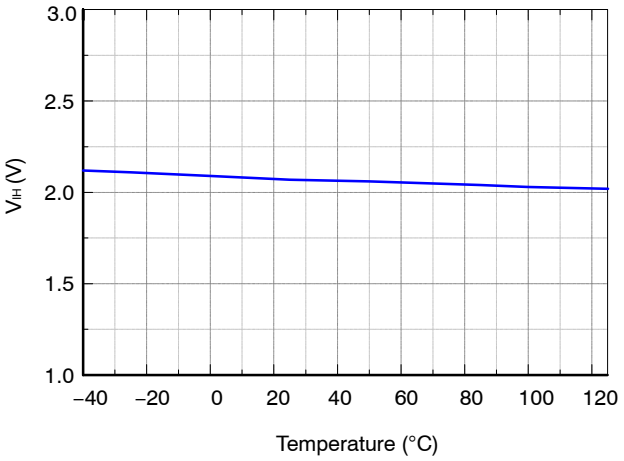

Figure 16. Logic HIGH Input Voltage vs. Temperature

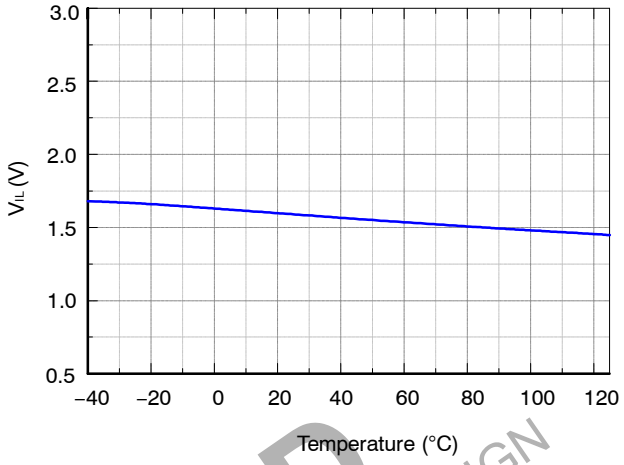

Figure 17. Logic LOW Input Voltage vs. Temperature

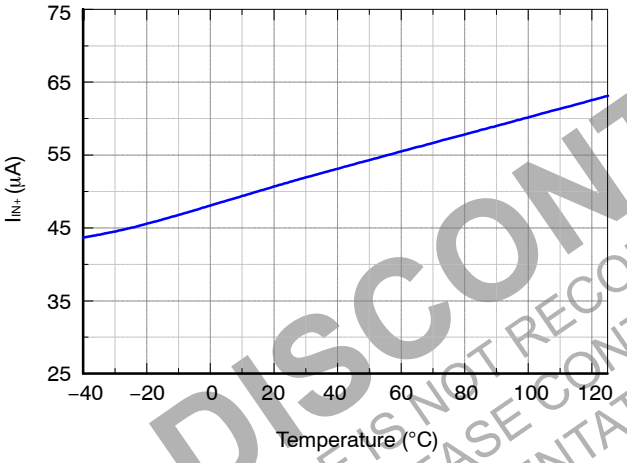

Figure 18. Logic HIGH Input Bias Current vs. Temperature

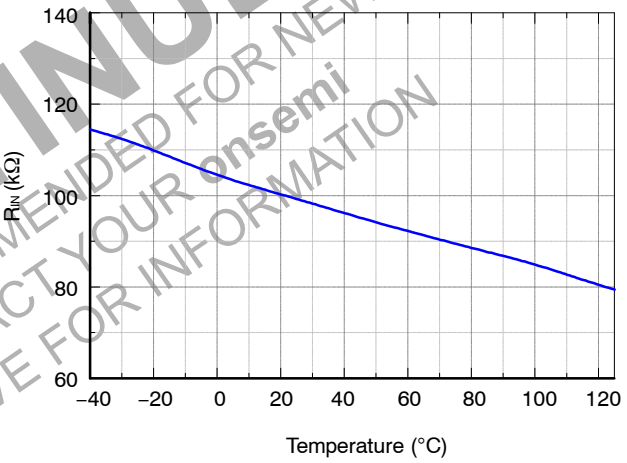

Figure 19. Input Pull−Down Resistance vs. Temperature

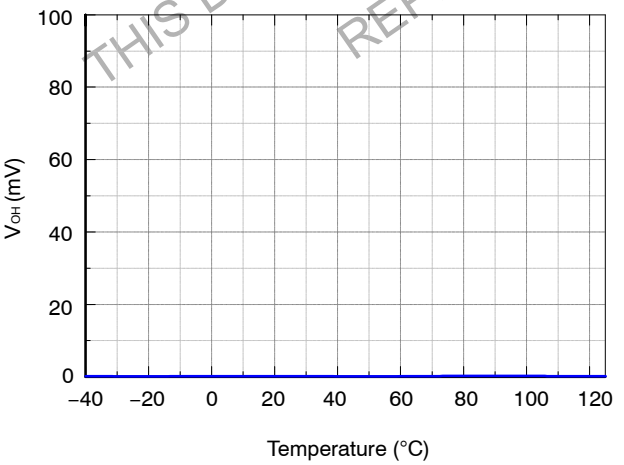

Figure 20. High−Level Output Voltage vs. Temperature

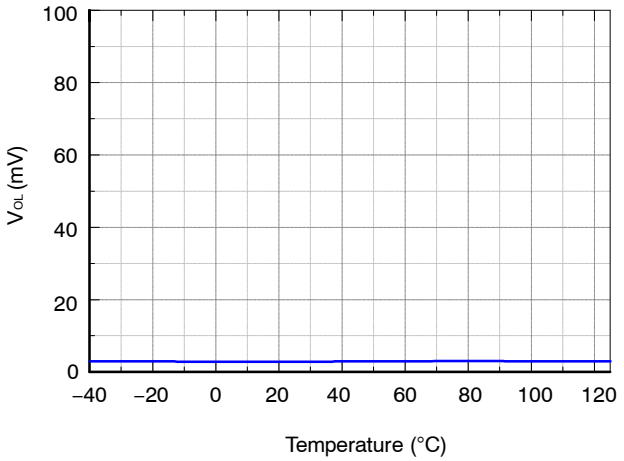

Figure 21. Low−Level Output Voltage vs. Temperature

DISCONTINUED
THIS DEVICE IS NOT RECOMMENDED FOR NEW DESIGN
PLEASE CONTACT YOUR onsemi
REPRESENTATIVE FOR INFORMATION

TYPICAL CHARACTERISTICS (Continued)

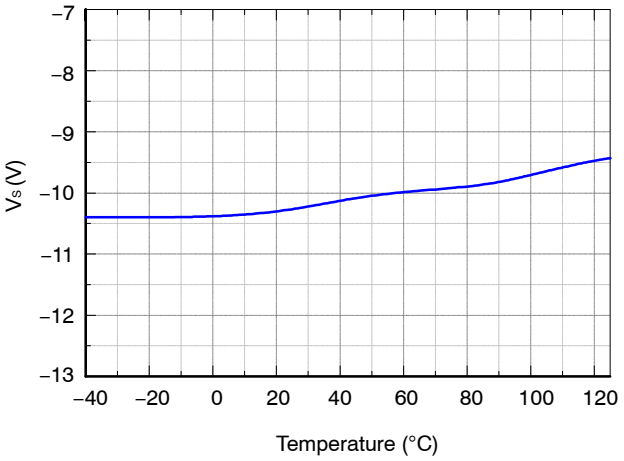

Figure 22. Allowable Negative V_S Voltage vs. Temperature

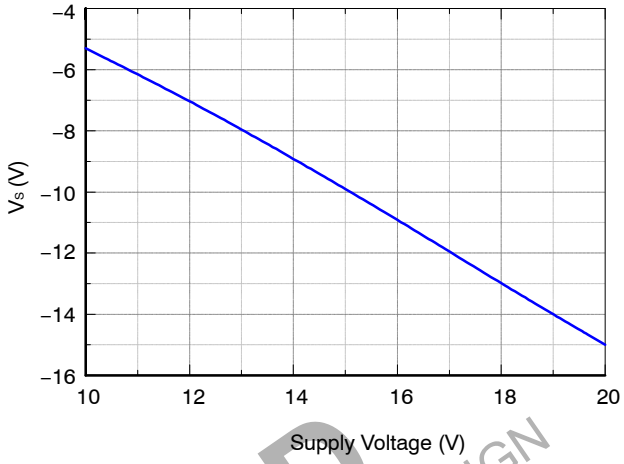

Figure 23. Allowable Negative V_S Voltage vs. Supply Voltage

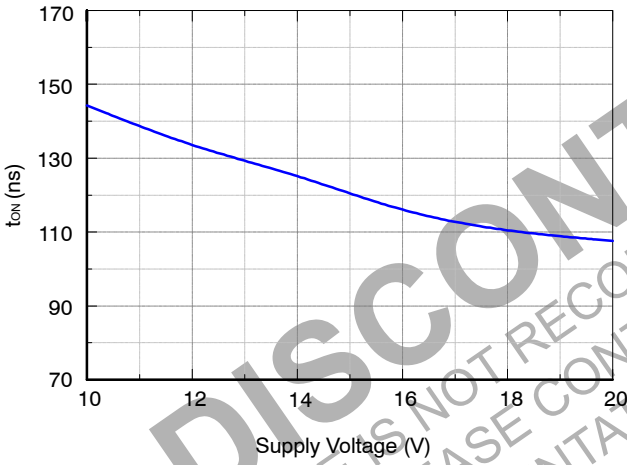

Figure 24. Turn−On Propagation Delay vs. Supply Voltage

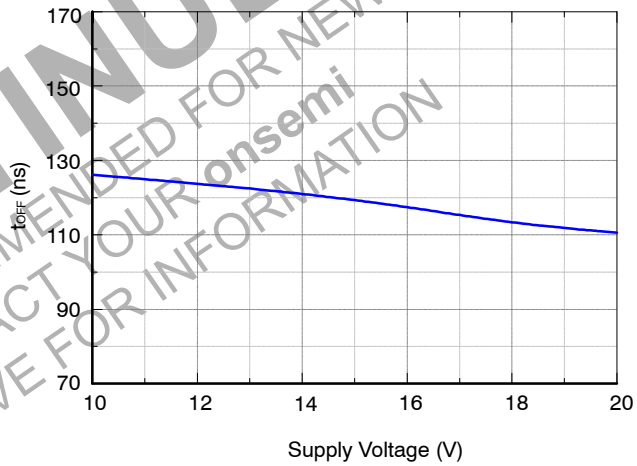

Figure 25. Turn−Off Propagation Delay vs. Supply Voltage

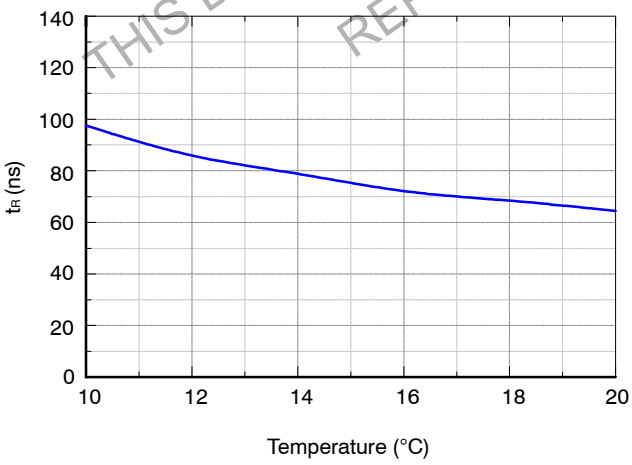

Figure 26. Turn−On Rise Time vs. Supply Voltage

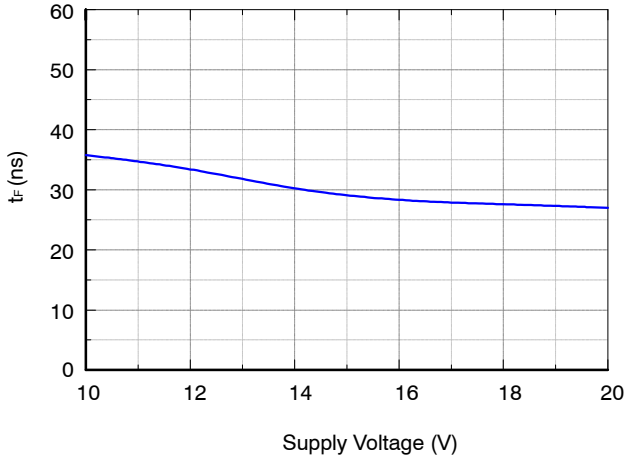

Figure 27. Turn−Off Fall Time vs. Supply Voltage

DISCONTINUED
THIS DEVICE IS NOT RECOMMENDED FOR NEW DESIGN
PLEASE CONTACT YOUR onsemi
REPRESENTATIVE FOR INFORMATION

TYPICAL CHARACTERISTICS (Continued)

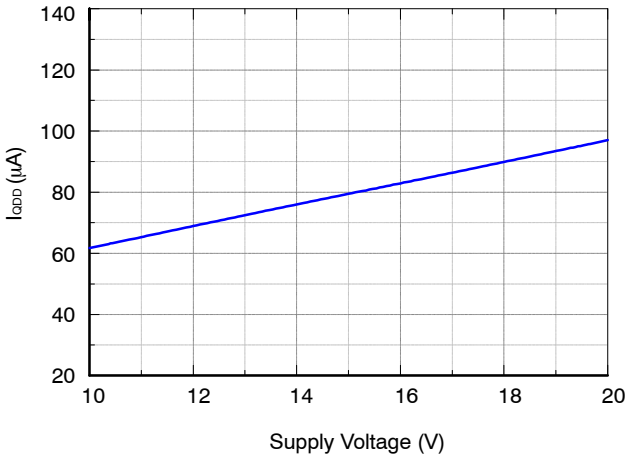

Figure 28. Quiescent V_{DD} Supply Current vs. Supply Voltage

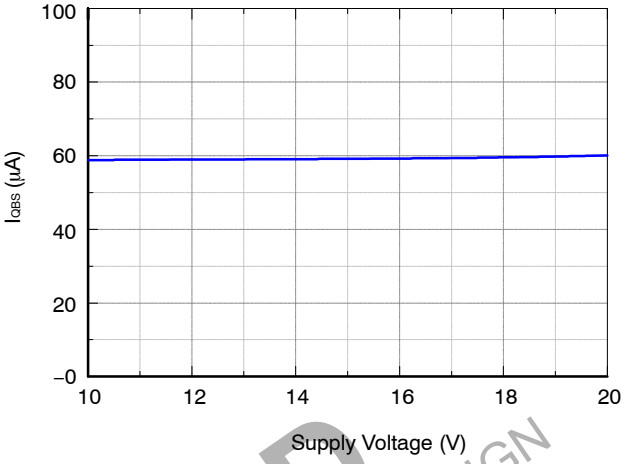

Figure 29. Quiescent V_{BS} Supply Current vs. Supply Voltage

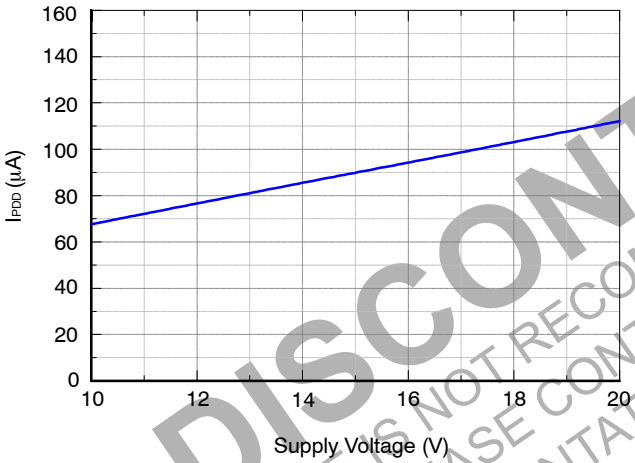

Figure 30. Operating V_{DD} Supply Current vs. Supply Voltage

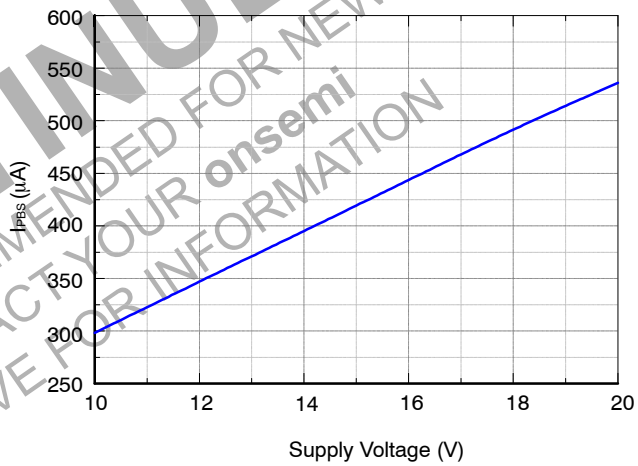

Figure 31. Operating V_{DD} Supply Current vs. Supply Voltage

DISCONTINUED
THIS DEVICE IS NOT RECOMMENDED FOR NEW DESIGN
PLEASE CONTACT YOUR onsemi
REPRESENTATIVE FOR INFORMATION

SWITCHING TIME DEFINITIONS

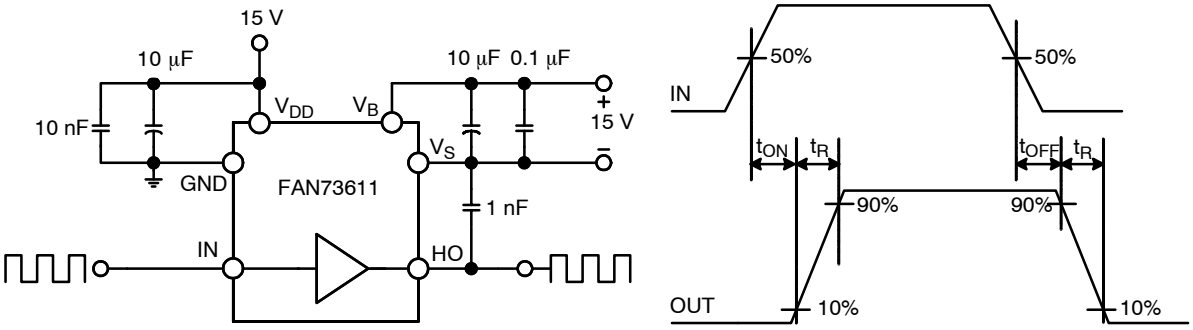

Figure 32. Switching Time Test Circuit and Waveforms Definitions

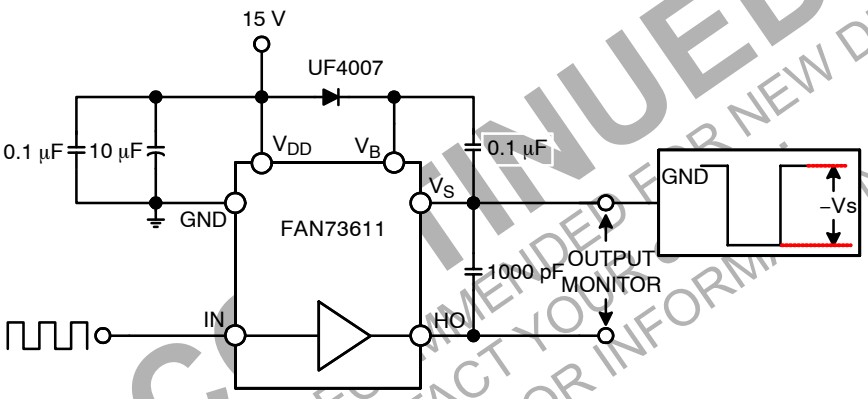

Figure 33. Floating Supply Voltage Transient Test

DISCONTINUED
THIS DEVICE IS NOT RECOMMENDED FOR NEW DESIGN
PLEASE CONTACT YOUR ON SEMI REPRESENTATIVE FOR INFORMATION

ORDERING INFORMATION

Device	Package	Operating Temperature	Description	Shipping†
FAN73611MX (Note 4)	SOIC8 (8−SOP) (Pb−Free)	−40°C~+125°C	Lightning Application	3000 / Tape & Reel

4. This device has passed wave soldering test by JESD22A−111.

†For information on tape and reel specifications, including part orientation and tape sizes, please refer to our Tape and Reel Packaging Specifications Brochure, BRD8011/D.

SOIC8
CASE 751EG
ISSUE O

DATE 30 SEP 2016

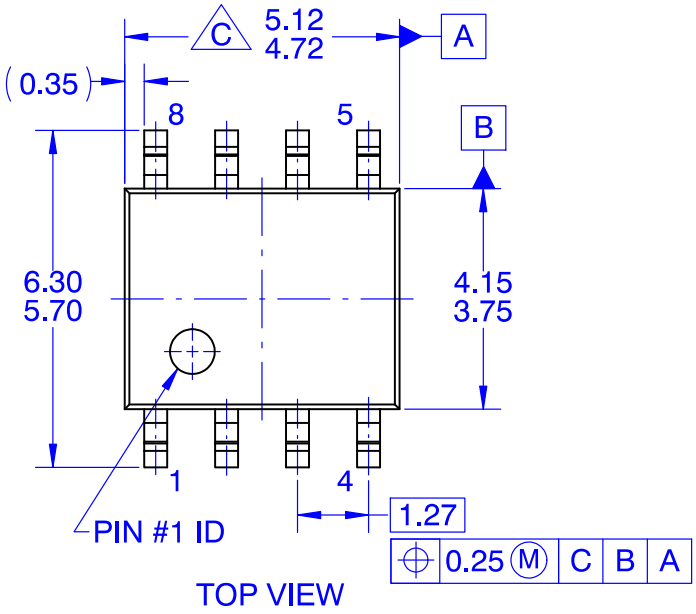

TOP VIEW

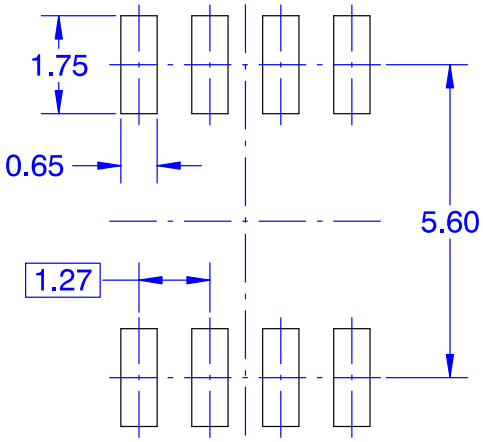

LAND PATTERN RECOMMENDATION

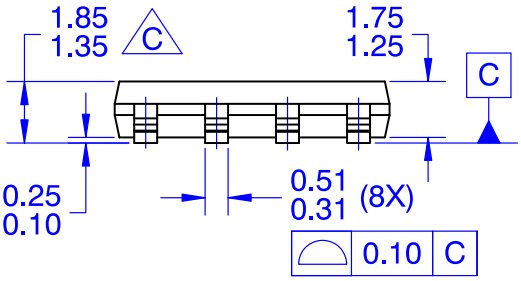

FRONT VIEW

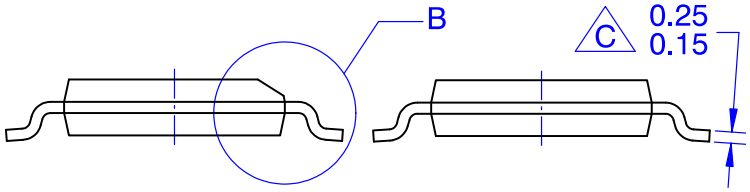

OPTION A
BEVEL EDGE

OPTION B
NON–BEVEL EDGE

SIDE VIEW

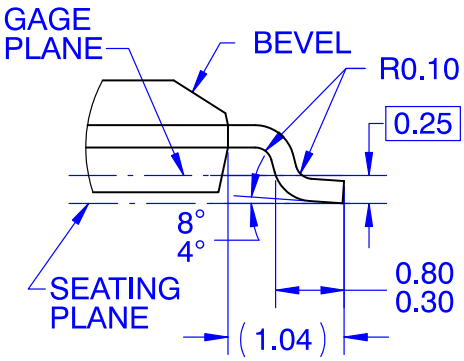

DETAIL "B"
SCALE 2:1

NOTES: UNLESS OTHERWISED SPECIFIED

A. THIS PACKAGE CONFORMS TO JEDEC MS–012 VARIATION A EXCEPT WHERE NOTED.
B. ALL DIMENSIONS ARE IN MILLIMETERS
C OUT OF JEDEC STANDARD VALUE
D. DIMENSIONS ARE EXCLUSIVE OF BURRS, MOLD FLASH AND TIE BAR EXTRUSIONS.
E. LAND PATTERN AS PER IPC SOIC127P600X175–8M

DOCUMENT NUMBER:	**98AON13741G**	Electronic versions are uncontrolled except when accessed directly from the Document Repository. Printed versions are uncontrolled except when stamped "CONTROLLED COPY" in red.
DESCRIPTION:	**SOIC8**	**PAGE 1 OF 1**

onsemi and onsemi are trademarks of Semiconductor Components Industries, LLC dba **onsemi** or its subsidiaries in the United States and/or other countries. **onsemi** reserves the right to make changes without further notice to any products herein. **onsemi** makes no warranty, representation or guarantee regarding the suitability of its products for any particular purpose, nor does **onsemi** assume any liability arising out of the application or use of any product or circuit, and specifically disclaims any and all liability, including without limitation special, consequential or incidental damages. **onsemi** does not convey any license under its patent rights nor the rights of others.

© Semiconductor Components Industries, LLC, 2016

onsemi, , and other names, marks, and brands are registered and/or common law trademarks of Semiconductor Components Industries, LLC dba "**onsemi**" or its affiliates and/or subsidiaries in the United States and/or other countries. **onsemi** owns the rights to a number of patents, trademarks, copyrights, trade secrets, and other intellectual property. A listing of **onsemi**'s product/patent coverage may be accessed at www.onsemi.com/site/pdf/Patent−Marking.pdf. **onsemi** reserves the right to make changes at any time to any products or information herein, without notice. The information herein is provided "as−is" and **onsemi** makes no warranty, representation or guarantee regarding the accuracy of the information, product features, availability, functionality, or suitability of its products for any particular purpose, nor does **onsemi** assume any liability arising out of the application or use of any product or circuit, and specifically disclaims any and all liability, including without limitation special, consequential or incidental damages. Buyer is responsible for its products and applications using **onsemi** products, including compliance with all laws, regulations and safety requirements or standards, regardless of any support or applications information provided by **onsemi**. "Typical" parameters which may be provided in **onsemi** data sheets and/or specifications can and do vary in different applications and actual performance may vary over time. All operating parameters, including "Typicals" must be validated for each customer application by customer's technical experts. **onsemi** does not convey any license under any of its intellectual property rights nor the rights of others. **onsemi** products are not designed, intended, or authorized for use as a critical component in life support systems or any FDA Class 3 medical devices or medical devices with a same or similar classification in a foreign jurisdiction or any devices intended for implantation in the human body. Should Buyer purchase or use **onsemi** products for any such unintended or unauthorized application, Buyer shall indemnify and hold **onsemi** and its officers, employees, subsidiaries, affiliates, and distributors harmless against all claims, costs, damages, and expenses, and reasonable attorney fees arising out of, directly or indirectly, any claim of personal injury or death associated with such unintended or unauthorized use, even if such claim alleges that **onsemi** was negligent regarding the design or manufacture of the part. **onsemi** is an Equal Opportunity/Affirmative Action Employer. This literature is subject to all applicable copyright laws and is not for resale in any manner.

ADDITIONAL INFORMATION

TECHNICAL PUBLICATIONS:
Technical Library: www.onsemi.com/design/resources/technical−documentation
onsemi Website: www.onsemi.com

ONLINE SUPPORT: www.onsemi.com/support
For additional information, please contact your local Sales Representative at www.onsemi.com/support/sales