# CAPAROC E1 12-24DC/4A - Electronic circuit breaker

1157285

https://www.phoenixcontact.com/us/products/1157285

Please be informed that the data shown in this PDF document is generated from our online catalog. Please find the complete data in the user documentation. Our general terms of use for downloads are valid.



1-channel electronic circuit breaker module for protecting 12 and 24 V DC loads against overload and short circuit. With fixed nominal current. For DIN rail installation via the CAPAROC current rails.

## Your advantages

- The benchmark that you can tailor with channel-precise design with integrated potential distribution
- Easy operation for everyone through tool-free assembly, uninterrupted installation, and transparent operating state
- Exceptionally easy design-in with the narrowest of space requirements and four protected outputs

## Commercial data

| | |
|---|---|
| Item number | 1157285 |
| Packing unit | 1 pc |
| Minimum order quantity | 1 pc |
| Sales key | CL11 |
| Product key | CLA232 |
| GTIN | 4063151161804 |
| Weight per piece (including packing) | 76.6 g |
| Weight per piece (excluding packing) | 71.4 g |
| Customs tariff number | 85363010 |
| Country of origin | DE |

# Technical data

## Notes

### General

| | |
|---|---|
| Note | LABS release – in accordance with test specification VW PV 3. 10.7:2005-0 |

## Product properties

| | |
|---|---|
| Product type | Device circuit breakers |
| Product family | CAPAROC |
| Type | Plug-in module |
| Number of positions | 1 |
| No. of channels | 1 |
| Number of slots | 1 |

### Insulation characteristics

| | |
|---|---|
| Protection class | III |
| Pollution degree | 2 |

## Electrical properties

### General

| | |
|---|---|
| Operating voltage | 10 V DC ... 30 V DC |
| Rated voltage | 12 V DC |
| | 24 V DC |
| Rated current $I_N$ | 4 A DC (per channel) |
| Rated current (pre-adjusted) | 4 A |
| Rated surge voltage | 0.5 kV |
| Tripping method | E (electronic) |
| Required backup fuse | Only required if $I_{max}$ of the power supply > the short-circuit switching capacity. Integrated failsafe element. |
| Short-circuit switching capacity | 300 A |
| Dielectric strength | 35 V DC (Load circuit) |
| Fuse | electronic |
| Efficiency | > 99 % |
| Closed circuit current $I_0$ | typ. 8.5 mA (no load at 24 V) |
| Power dissipation | typ. 0.2 W (no load at 24 V) |
| | < 0.57 W (in nominal operation at 24 V and 4 A) |
| Measuring tolerance I | ± 15 % (typ.) |
| MTBF (IEC 61709, SN 29500) | 21274544 h (at 25 °C with 21 % load) |
| | 9809987 h (at 40°C with 34.25% load) |
| | 1482752 h (at 40°C with 100% load) |
| Voltage drop | 0.09 V (at 4 A) |
| Fail-safe element | 5 A DC (per output channel) |

| | |
|---|---|
| Contact switching type | without electrical isolation |

Load circuit

| | |
|---|---|
| Shutdown time | 4 s (with overload 1.1…1.5 x $I_N$) |
| | 1 s (with overload 1.5…2.0 x $I_N$) |
| | 0.1 s (with overload 2.0…3.0 x $I_N$) |
| | typ. 10 ms (For short circuit > 3.0 x $I_N$) |
| Undervoltage switch-off | ≤ 8.5 V DC (active) |
| | ≥ 9.2 V DC (inactive) |
| Overvoltage switch-off | ≥ 32.5 V DC (active) |
| | ≤ 30.5 V DC (inactive) |
| Max. capacitive load | ≤ 20000 µF (Depending on the current setting and the short-circuit current available) |
| Switch-on delay | 50 ms (can be adapted with CAPAROC PM IOL and CAPAROC PM PN power modules) |

## Connection data

Fuse-protected output

| | |
|---|---|
| Connection method | Push-in connection |
| Stripping length | 10 mm |
| Conductor cross-section flexible | 0.2 mm² ... 4 mm² |
| Conductor cross-section rigid | 0.2 mm² ... 4 mm² |
| Conductor cross-section AWG | 24 ... 12 |
| Conductor cross-section, flexible, with ferrule, with plastic sleeve | 0.25 mm² ... 4 mm² |
| Conductor cross-section flexible, with ferrule without plastic sleeve | 0.25 mm² ... 4 mm² |

## Signaling

| | |
|---|---|
| Channel LED off | off (Channel switched off) |
| Channel LED yellow | lit (Channel switched on, channel load > 80% ) |
| | flashing (Programming mode active) |
| | two flashes (Check the installation, no communication to power module) |
| Channel LED green | lit (Channel switched on) |
| Channel LED red | lit (Channel switched off, over- or undervoltage active) |
| | ON temporarily (Channel switched off, 5 s cool-down phase, overload or short-circuit release) |
| | flashing (Channel switched off, ready to be switched back on, overload or short-circuit release) |

## Dimensions

| | |
|---|---|
| Dimensional drawing | 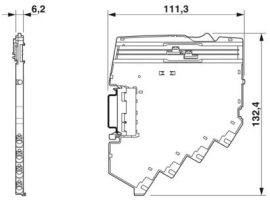 |
| Width | 6.2 mm |
| Height | 132.4 mm |
| Depth | 111.3 mm (incl. DIN rail 7.5 mm) |

## Material specifications

| | |
|---|---|
| Color | light gray (RAL 7035) |
| Material | PA 6 |
| | PA 6 |
| | PA 6 |
| | PC |
| Flammability rating according to UL 94 | V-0 |

## Environmental and real-life conditions

### Ambient conditions

| | |
|---|---|
| Degree of protection | IP20 |
| Ambient temperature (operation) | -30 °C ... 65 °C (The temperature range of the power module must be taken into consideration) |
| Ambient temperature (storage/transport) | -40 °C ... 70 °C |
| Altitude | ≤ 4000 m (amsl) |
| Humidity test | 96 h, 95 % RH, 40 °C |
| Shock (operation) | 30g (11 ms period, half-sine shock pulse, according to IEC 60068-2-27) |
| | 25g (6 ms duration, half-sine shock pulse in accordance with IEC 60068-2-27, continuous shock) |
| | 15g (6 ms duration, half-sine shock pulse in accordance with IEC 60068-2-27, continuous shock. If more than six CAPAROC E1 modules are used in the system.) |
| Vibration (operation) | 5g (10 Hz ... 150 Hz / 10 cycles / axis / X, Y, Z) |

## Approvals

### UL approval

| | |
|---|---|
| Identification | UL/C-UL Listed UL 508 |
| | UL Recognized UL 2367 |
| | UL 121201 Class I, Division 2, Groups A, B, C, D, T4A |
| | NEC Class 2 according to UL 1310 |

### Corrosive gas test

| | |
|---|---|
| Identification | ISA S71.04.2013 G3 Harsh Group A |

## Standards and regulations

| | |
|---|---|
| Standards/specifications | EN 61000-6-2 |
| Note | EMC – Immunity for industrial areas |
| Standards/specifications | EN 61000-6-3 |
| Note | EMC – Emission for residential, business and commercial properties and small operations |
| Standards/specifications | EN 60068-2-78 |
| Note | Environmental influences – Moisture and heat, constant |
| Standards/specifications | EN 50178 |
| Note | Equipping power installations with electronic equipment |
| Standards/specifications | EN 60068-2-6 |
| Note | Environmental influences – Vibrations (sinusoidal) |
| Standards/specifications | EN 60068-2-27 |
| Note | Environmental influences – Shocks |

## Mounting

| | |
|---|---|
| Mounting type | pluggable onto CAPAROC CR… current rail |

## Drawings

Dimensional drawing

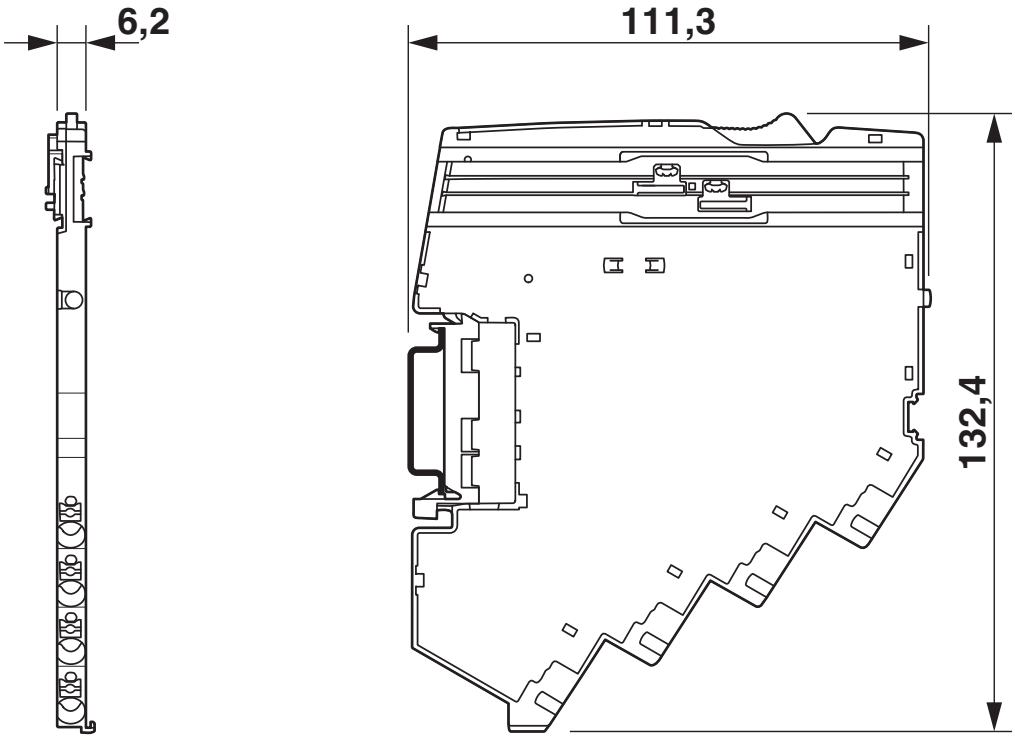


Product drawing



Application drawing

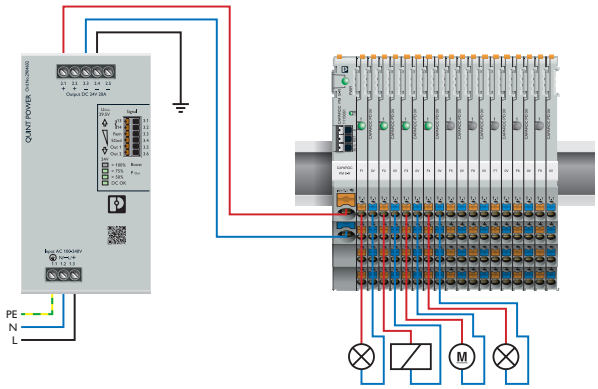


Diagram

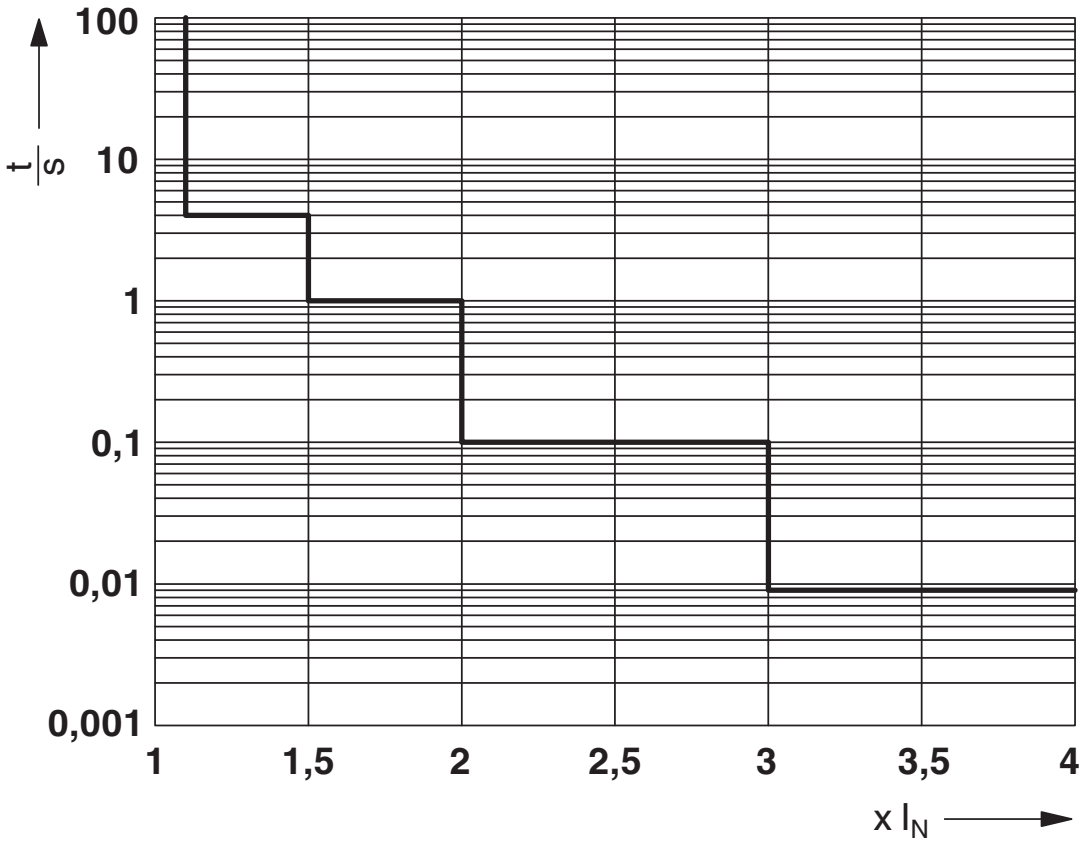


Trigger characteristic

Diagram

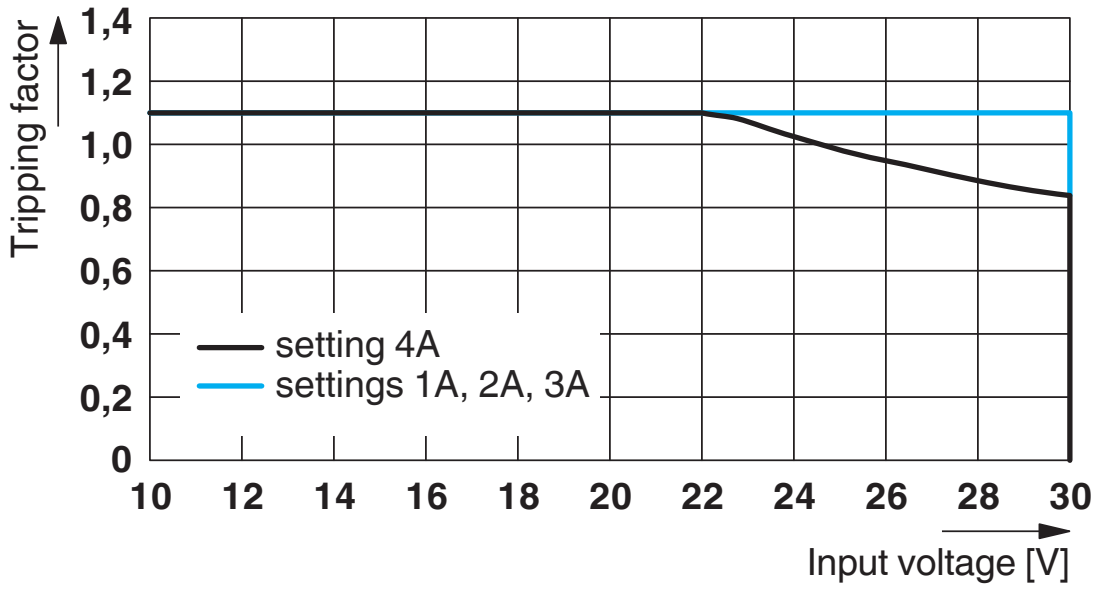


Tripping characteristic according to the input voltage

Block diagram

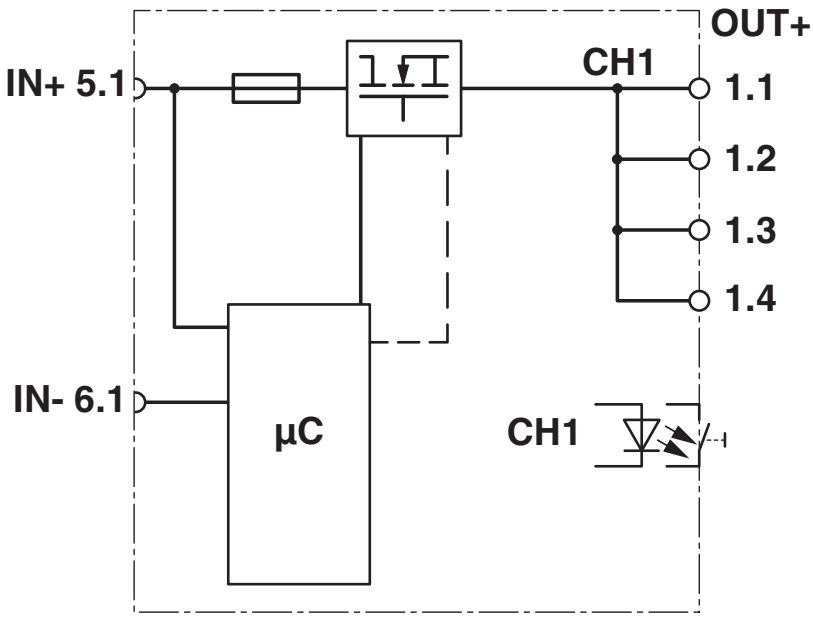

## Approvals

To download certificates, visit the product detail page: https://www.phoenixcontact.com/us/products/1157285

**UL Recognized**
Approval ID: FILE E 317172

**UL Listed**
Approval ID: E123528

**cUL Listed**
Approval ID: E123528

**UL Recognized**
Approval ID: FILE E 324415

**cUL Listed**
Approval ID: FILE E 483407

**UL Listed**
Approval ID: FILE E 483407

## Classifications

### ECLASS

| | |
|---|---|
| ECLASS-13.0 | 27140401 |
| ECLASS-15.0 | 27140401 |

### ETIM

| | |
|---|---|
| ETIM 9.0 | EC003538 |

### UNSPSC

| | |
|---|---|
| UNSPSC 21.0 | 39121400 |

## Environmental product compliance

EU RoHS

| | |
|---|---|
| Fulfills EU RoHS substance requirements | Yes |
| Exemption | 7(a), 7(c)-I |

China RoHS

| | |
|---|---|
| Environment friendly use period (EFUP) | EFUP-50 |
| | An article-related China RoHS declaration table can be found in the download area for the respective article under "Manufacturer declaration". For all articles with EFUP-E, no China RoHS declaration table issued and required. |

EU REACH SVHC

| | |
|---|---|
| REACH candidate substance (CAS No.) | Lead(CAS: 7439-92-1) |
| | 2,2',6,6'-tetrabromo-4,4'-isopropylidenediphenol(CAS: 79-94-7) |
| SCIP | 337dc387-b238-4b4f-9035-9daf2082d1df |

Phoenix Contact 2025 © - all rights reserved
https://www.phoenixcontact.com

Phoenix Contact USA
586 Fulling Mill Road
Middletown, PA 17057, United States
(+717) 944-1300
info@phoenixcon.com