Data sheet



MLG50A-1150R10501

MLG-2

AUTOMATION LIGHT GRIDS

SICK
Sensor Intelligence.



Illustration may differ

Ordering information

Type	part no.
MLG50A-1150R10501	1214341

Other models and accessories ➜ www.sick.com/MLG-2

Detailed technical data

Features

Device version	Pro - Extended functionality
Sensor principle	Sender/receiver
Minimum detectable object (MDO)	50 mm [1] 54 mm [2] [3]
Beam separation	50 mm
Type of synchronization	Cable
Number of beams	24
Detection height	1,150 mm
Software features (default)	
Q_1	Presence detection
Q2 / IN	Teach input
Q_3	Presence detection
Q4 / IN2	Presence detection
Teach	Standard mode
Operating mode	
Standard	✓
Transparent	✓

[1] MDO min. detectable object at high measurement accuracy.
[2] MDO min. detectable object for standard measurement accuracy.
[3] Depending on beam separation without cross beam setting.

Dust- and sunlight-resistant	✓
Function	
Cross beam	✓
Beam blanking	✓
High measurement accuracy	✓
Applications	
Switching output	Object detection/object widthObject recognitionHeight classificationHole detection/hole size-Outside/inside dimensionObject positionHole positionZone definition
Data interface	Object detectionHole detectionObject height measurementMeasurement of the outside dimensionMeasurement of the inside dimensionMeasurement of the object positionMeasurement of the hole position
Included with delivery	1 × sender 1 × receiver 4/6 x QuickFix brackets (6 x QuickFix brackets for monitoring heights above 2 m) 1 × Quick Start Guide

[1] MDO min. detectable object at high measurement accuracy.
[2] MDO min. detectable object for standard measurement accuracy.
[3] Depending on beam separation without cross beam setting.

Mechanics/electronics

Light source	LED, Infrared light
Wave length	850 nm
Supply voltage V_s	DC 19.2 V ... 28.8 V [1]
Power consumption sender	56.2 mA [2]
Power consumption receiver	124.8 mA [2]
Ripple	< 5 V_{pp}
Output current $I_{max.}$	100 mA
Output load, capacitive	100 nF
Output load, Inductive	1 H
Initialization time	< 1 s
Switching output	Push-pull: PNP/NPN
Connection type	Plug, M12, 5-pin, 0.22 m Male connector M12, 8-pin, 0.27 m M12 female connector, 4-pin, D-coded, 0.19 m
Housing material	Aluminum
Display	LED
Enclosure rating	IP65, IP67 [3]
Circuit protection	U_V connections, reverse polarity protected Output Q short-circuit protected Interference pulse suppression
Protection class	III
Weight	2.649 kg
Front screen	PMMA

[1] Without load.
[2] Without load with 24 V.
[3] Operating in outdoor condition only with a external protection housing.

Option	None
UL File No.	NRKH.E181493

[1] Without load.
[2] Without load with 24 V.
[3] Operating in outdoor condition only with a external protection housing.

Performance

Maximum range	7 m [1]
Minimum range	≥ 0 m
Operating range	5 m
Response time	3.6 ms [2]

[1] No reserve for environmental issue and deterioration of the diode.
[2] Without high speed.

Interfaces

IO-Link	✓ , IO-Link V1.1
Data transmission rate	230,4 kbit/s (COM3)
Maximum cable length	20 m
Cycle time	2.3 ms
VendorID	26
DeviceID HEX	800068
DeviceID DEC	8388712
Process data length	32 Byte (TYPE_2_V) [1]
Inputs/outputs	4 x Q (IO-Link)
Digital output	Q_1 ... Q_4
Number	4
Digital input	In_1, In_2
Number	2

[1] For an IO-Link master with V1.0, reverts to interleaved mode (consisting of TYPE_1_1 (ProcessData) and TYPE_1_2 (on-request data)).

Ambient data

Shock resistance	Continuous shocks 10 g, 16 ms, 1000 shocks Single shocks 15 g, 11 ms 3 per axle
Vibration resistance	Sinusoidal oscillation 10-150 Hz 5 g
EMC	EN 60947-5-2
Ambient light immunity	Direct: 150,000 lx [1] Indirect: 200,000 lx [2]
Ambient operating temperature	–30 °C ... +55 °C
Ambient temperature, storage	–40 °C ... +70 °C

[1] Outdoor mode.
[2] Light resistance indirect.

Smart Task

Smart Task name	Base logics

Certificates

EU declaration of conformity	✓
UK declaration of conformity	✓
ACMA declaration of conformity	✓
Moroccan declaration of conformity	✓
China-RoHS	✓
cULus certificate	✓
IO-Link	✓
Photobiological safety (IEC EN 62471)	✓

Classifications

ECLASS 5.0	27270910
ECLASS 5.1.4	27270910
ECLASS 6.0	27270910
ECLASS 6.2	27270910
ECLASS 7.0	27270910
ECLASS 8.0	27270910
ECLASS 8.1	27270910
ECLASS 9.0	27270910
ECLASS 10.0	27270910
ECLASS 11.0	27270910
ECLASS 12.0	27270910
ETIM 5.0	EC002549
ETIM 6.0	EC002549
ETIM 7.0	EC002549
ETIM 8.0	EC002549
UNSPSC 16.0901	39121528

Dimensional drawing

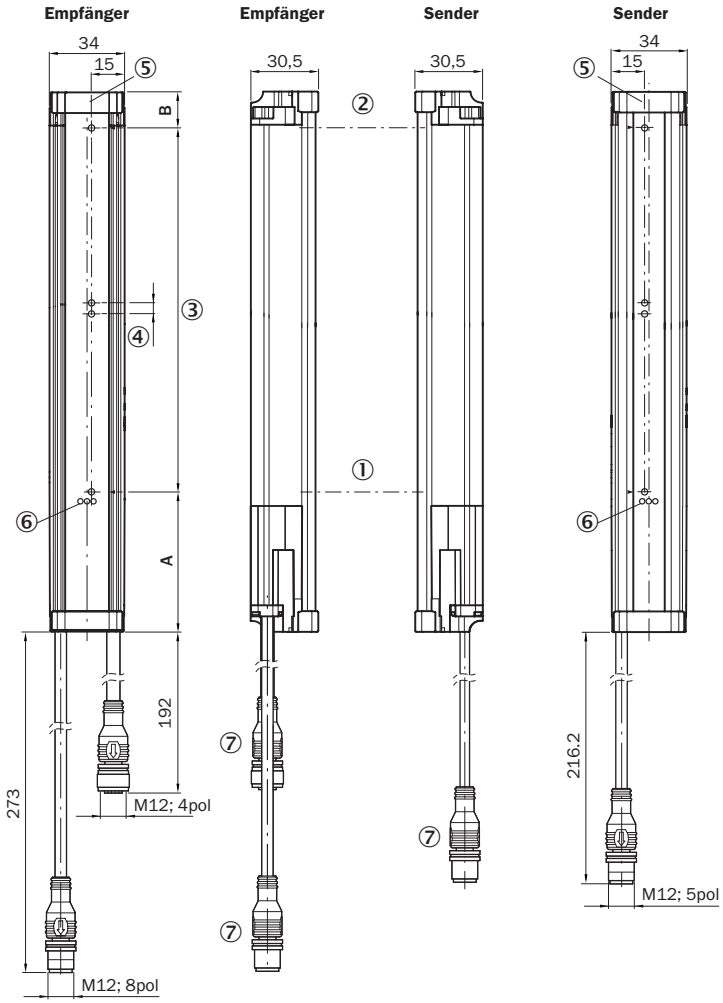

	A [1]	B [2]
Strahlabstand 2,5 mm	62,25	17,15
Strahlabstand 5 mm	63,3	16,1
Strahlabstand 10 mm	68,3	16,1
Strahlabstand 20 mm	68,3/78,3 [3]	16,1
Strahlabstand 25 mm	83,3	16,1
Strahlabstand 30 mm	88,3	16,1
Strahlabstand 50 mm	108,3	16,1

[1] Abstand: MLG-2 Kante - erster Strahl
[2] Abstand: MLG-2 Kante - letzter Strahl
[3] MLG20x-xx**40**: 68,3 mm
MLG20x-xx**80**: 78,3 mm

Dimensions in mm (inch)
① First beam
② last beam
③ detection height (see technical data)
④ Beam separation
⑤ Optical axis
⑥ status indicator: green, yellow, red LEDs
⑦ Connection

Connection type and diagram Connector M12, 5/8-pin, switching outputs Q

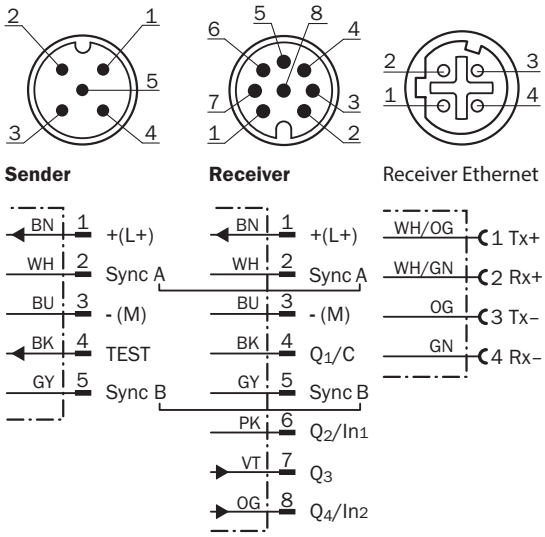

Pinouts

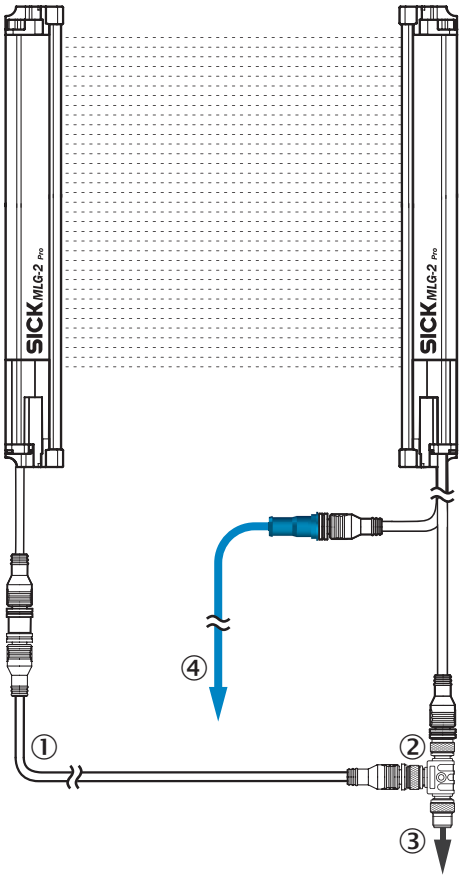

① Connection cable receiver (2096010)
② T-piece
③ Connection cable (6020664)
④ Ethernet Connection cable

Adjustments

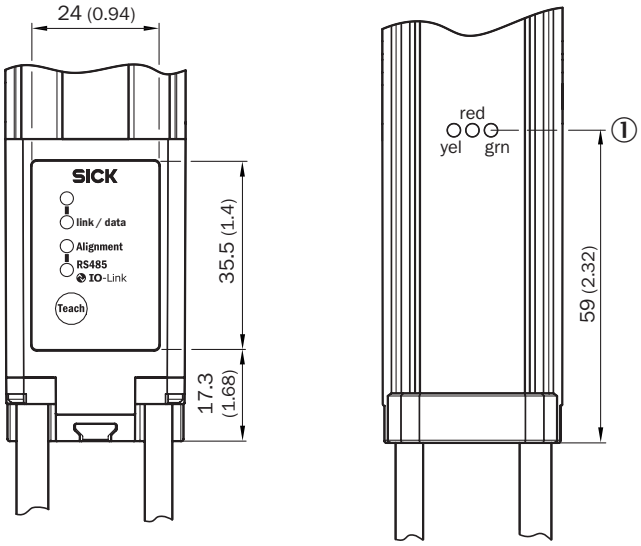

① status indicator: green, yellow, red LEDs

Connection diagram T-splitter, IO-Link Master

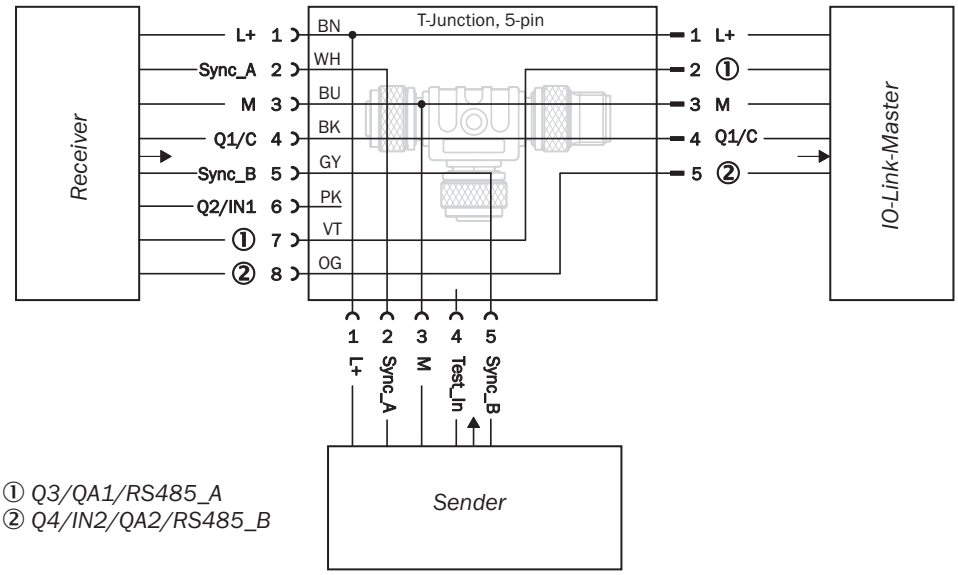

① *Q3/QA1/RS485_A*
② *Q4/IN2/QA2/RS485_B*

Connection diagram T-splitter, PLC

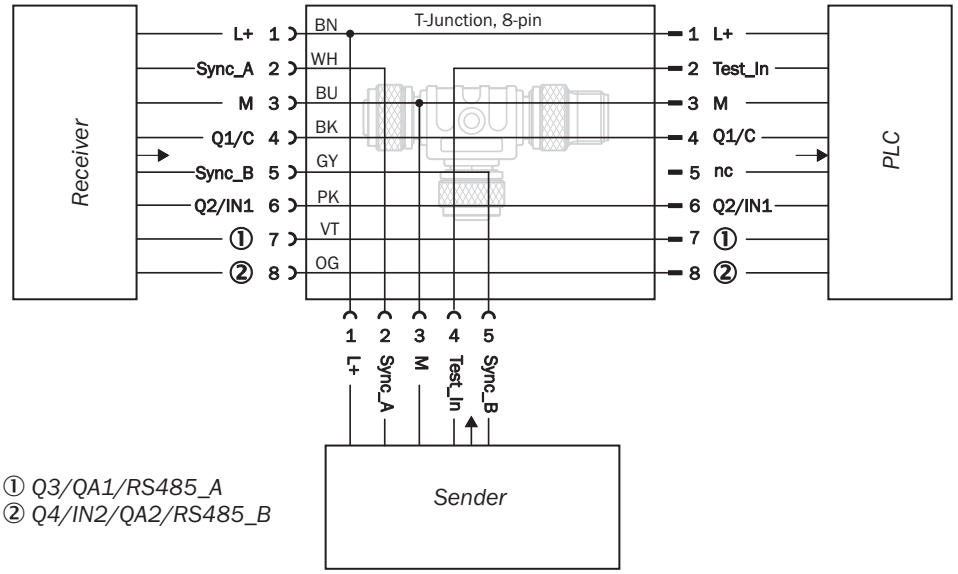

① *Q3/QA1/RS485_A*
② *Q4/IN2/QA2/RS485_B*

Recommended accessories

Other models and accessories ➜ www.sick.com/MLG-2

	Brief description	Type	part no.
connectors and cables			
	• **Connection type head A:** Female connector, M12, 5-pin, A-coded • **Connection type head B:** Female connector, M12, 8-pin, A-coded • **Connection type head C:** Male connector, M12, 7-pin, A-coded • **Description:** Unshielded • **Note:** For connecting of a PLC	SB0-02F12-SM1	6053172
	• **Connection type head A:** Female connector, M12, 8-pin, straight • **Connection type head B:** Flying leads • **Signal type:** Sensor/actuator cable • **Cable:** 5 m, 8-wire, PVC • **Description:** Sensor/actuator cable, special color code, shielded • **Connection systems:** Flying leads	DOL-1208-G05MF	6020664
	• **Connection type head A:** Female connector, M12, 5-pin, straight, A-coded • **Connection type head B:** Male connector, M12, 5-pin, straight, A-coded • **Signal type:** Sensor/actuator cable • **Cable:** 5 m, 5-wire, PUR, halogen-free • **Description:** Sensor/actuator cable, unshielded • **Application:** Uncontaminated zones, Zones with oils and lubricants, Robot, Drag chain operation	YF2A15-050UB5M2A15	2096010
	• **Connection type head A:** Male connector, M12, 4-pin, straight, D-coded • **Connection type head B:** Male connector, RJ45, 4-pin, straight • **Signal type:** Ethernet, PROFINET • **Cable:** 5 m, 4-wire, PUR, halogen-free • **Description:** Ethernet, shieldedPROFINET • **Application:** Drag chain operation, Zones with oils and lubricants	YM2D24-050P-N1MRJA4	2106184

	Brief description	Type	part no.
network devices			
		SIG350-0004AP100	6076871
		SIG350-0006AP100	6076924
		SIG350-0005AP100	6076923

SICK AT A GLANCE

SICK is one of the leading manufacturers of intelligent sensors and sensor solutions for industrial applications. A unique range of products and services creates the perfect basis for controlling processes securely and efficiently, protecting individuals from accidents and preventing damage to the environment.

We have extensive experience in a wide range of industries and understand their processes and requirements. With intelligent sensors, we can deliver exactly what our customers need. In application centers in Europe, Asia and North America, system solutions are tested and optimized in accordance with customer specifications. All this makes us a reliable supplier and development partner.

Comprehensive services complete our offering: SICK LifeTime Services provide support throughout the machine life cycle and ensure safety and productivity.

For us, that is “Sensor Intelligence.”

WORLDWIDE PRESENCE:

Contacts and other locations –www.sick.com