Small Signal Diode

1N91x, 1N4x48, FDLL914, FDLL4x48

DO−35
Cathode is denoted with a black band

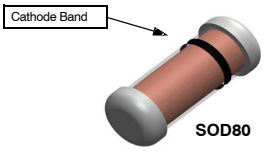

LL−34

THE PLACEMENT OF THE EXPANSION GAP HAS NO RELATIONSHIP TO THE LOCATION OF THE CATHODE TERMINAL

SOD−80 COLOR BAND MARKING

DEVICE	1ST BAND
FDLL914	BLACK
FDLL914A	BLACK
FDLL914B	BLACK
FDLL4148	BLACK
FDLL4448	BLACK

-1st band denotes cathode terminal and has wider width

ORDERING INFORMATION

Part Number	Marking	Package	Packing Method
1N914	914	DO−204AH (DO−35)	Bulk
1N914−T50A	914	DO−204AH (DO−35)	Ammo
1N914TR	914	DO−204AH (DO−35)	Tape and Reel
1N914ATR	914A	DO−204AH (DO−35)	Tape and Reel
1N914B	914B	DO−204AH (DO−35)	Bulk
1N914BTR	914B	DO−204AH (DO−35)	Tape and Reel
1N916	916	DO−204AH (DO−35)	Bulk
1N916A	916A	DO−204AH (DO−35)	Bulk
1N916B	916B	DO−204AH (DO−35)	Bulk
1N4148	4148	DO−204AH (DO−35)	Bulk
1N4148TA	4148	DO−204AH (DO−35)	Ammo
1N4148−T26A	4148	DO−204AH (DO−35)	Ammo
1N4148−T50A	4148	DO−204AH (DO−35)	Ammo
1N4148TR	4148	DO−204AH (DO−35)	Tape and Reel
1N4148−T50R	4148	DO−204AH (DO−35)	Tape and Reel
1N4448	4448	DO−204AH (DO−35)	Bulk
1N4448TR	4448	DO−204AH (DO−35)	Tape and Reel
FDLL914	Black	SOD−80	Tape and Reel
FDLL914A	Black	SOD−80	Tape and Reel
FDLL914B	Black	SOD−80	Tape and Reel
FDLL4148	Black	SOD−80	Tape and Reel
FDLL4148−D87Z	Black	SOD−80	Tape and Reel
FDLL4448	Black	SOD−80	Tape and Reel
FDLL4448−D87Z	Black	SOD−80	Tape and Reel

© Semiconductor Components Industries, LLC, 2002

ABSOLUTE MAXIMUM RATINGS (Values are at T_A = 25°C unless otherwise noted) (Note 1)

Rating		Symbol	Value	Unit
Maximum Repetitive Reverse Voltage		V_{RRM}	100	V
Average Rectified Forward Current		I_O	200	mA
DC Forward Current		I_F	300	mA
Recurrent Peak Forward Current		I_f	400	mA
Non−repetitive Peak Forward Surge Current	Pulse Width = 1.0 s	I_{FSM}	1.0	A
	Pulse Width = 1.0 μs		4.0	A
Storage Temperature Range		T_{STG}	−65 to +200	°C
Operating Junction Temperature Range		T_J	−55 to +175	°C

Stresses exceeding those listed in the Maximum Ratings table may damage the device. If any of these limits are exceeded, device functionality should not be assumed, damage may occur and reliability may be affected.

1. These ratings are limiting values above which the serviceability of the diode may be impaired.

THERMAL CHARACTERISTICS

Parameter	Symbol	Max	Unit
Power Dissipation	P_D	500	mW
Thermal Resistance, Junction−to−Ambient	$R_{\theta JA}$	300	°C

ELECTRICAL CHARACTERISTICS (Values are at T_A = 25°C unless otherwise noted) (Note 2)

Symbol	Parameter		Conditions	Min	Max	Unit
V_R	Breakdown Voltage		I_R = 100 μA	100		V
			I_R = 5.0 μA	75		V
V_F	Forward Voltage	914B / 4448	I_F = 5.0 mA	0.62	0.72	V
		916B	I_F = 5.0 mA	0.63	0.73	V
		914 / 916 / 4148	I_F = 10 mA		1.0	V
		914A / 916A	I_F = 20 mA		1.0	V
		916B	I_F = 20 mA		1.0	V
		914B / 4448	I_F = 100 mA		1.0	V
I_R	Reverse Leakage		V_R = 20 V		0.025	μA
			V_R = 20 V, T_A = 150°C		50	μA
			V_R = 75 V		5.0	μA
C_T	Total Capacitance	916/916A/916B/4448	V_R = 0, f = 1.0 MHz		2.0	pF
		914/914A/914B/4148	V_R = 0, f = 1.0 MHz		4.0	pF
t_{rr}	Reverse Recovery Time		I_F = 10 mA, V_R = 6.0 V (600 mA) I_{rr} = 1.0 mA, R_L = 100 Ω		4.0	ns

Product parametric performance is indicated in the Electrical Characteristics for the listed test conditions, unless otherwise noted. Product performance may not be indicated by the Electrical Characteristics if operated under different conditions.

2. Non−recurrent square wave P_W = 8.3 ms.

Share Feedback
Your Opinion Matters

TYPICAL PERFORMANCE CHARACTERISTICS

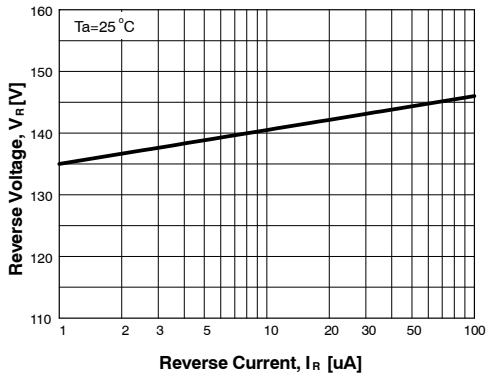

Figure 1. Reverse Voltage vs. Reverse Current
B_V – 1.0 to 100 μA

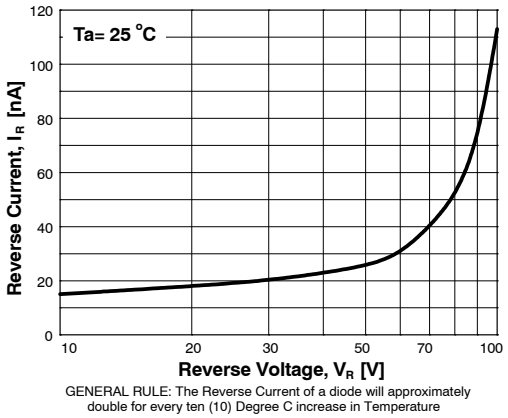

Figure 2. Reverse Current vs. Reverse Voltage
I_R – 10 to 100 V

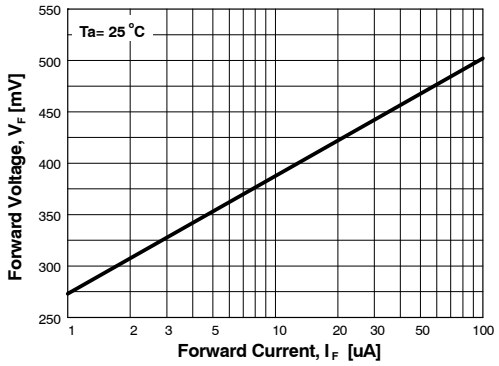

Figure 3. Forward Voltage vs. Forward Current
V_F – 1 to 100 μA

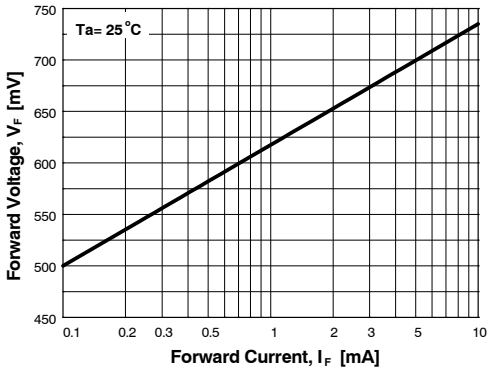

Figure 4. Forward Voltage vs. Forward Current
V_F – 0.1 to 10 mA

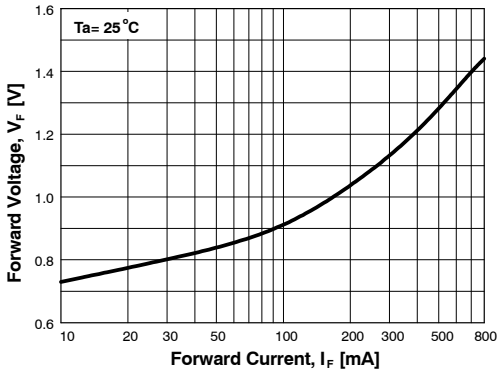

Figure 5. Forward Voltage vs. Forward Current
V_F – 10 to 800 mA

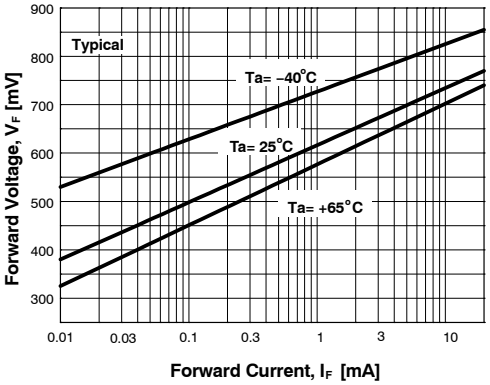

Figure 6. Forward Voltage vs. Ambient Temperature
V_F - 0.01 - 20 mA (- 40 to +65°C)

Share Feedback
Your Opinion Matters

TYPICAL PERFORMANCE CHARACTERISTICS

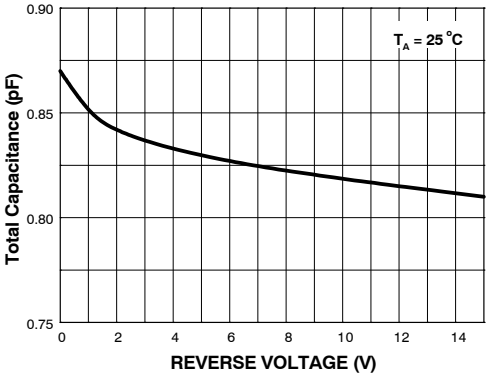

Figure 7. Total Capacitance

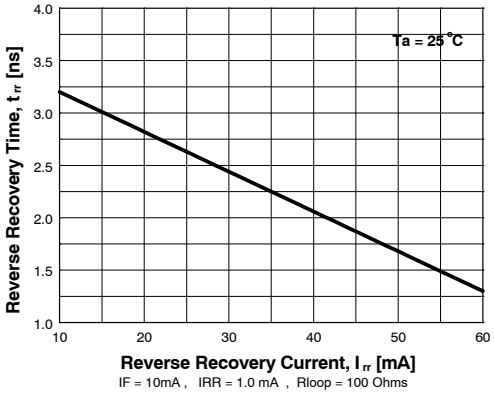

Figure 8. Reverse Recovery Time vs. Reverse Recovery Current

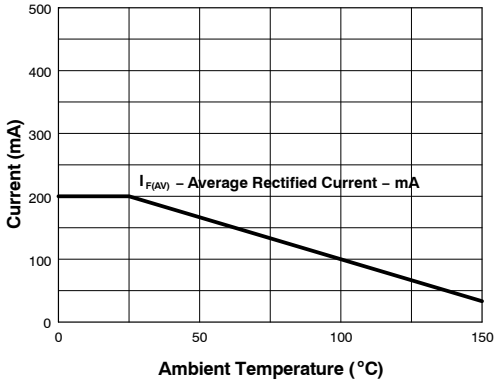

Figure 9. Average Rectified Current ($I_{F(AV)}$) vs. Ambient Temperature (T_A)

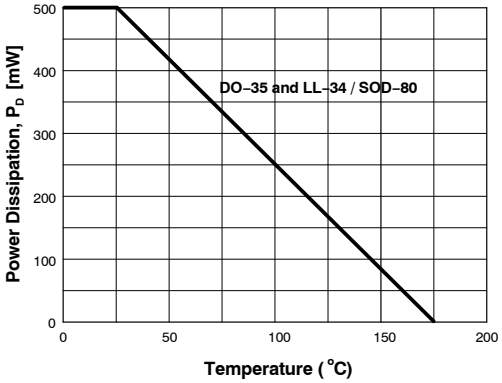

Figure 10. Power Derating Curve

Share Feedback
Your Opinion Matters

AXIAL LEAD
CASE 017AG
ISSUE O

DATE 31 AUG 2016

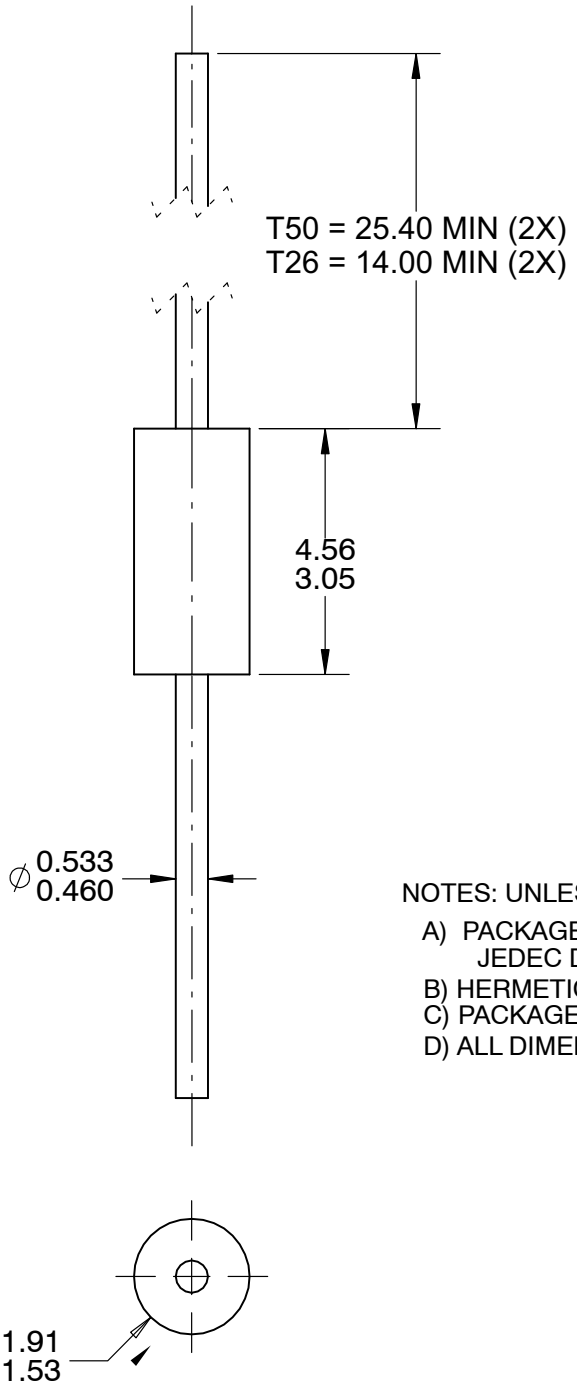

NOTES: UNLESS OTHERWISE SPECIFIED

A) PACKAGE STANDARD REFERENCE: JEDEC DO−204, VARIATION AH.
B) HERMETICALLY SEALED GLASS PACKAGE.
C) PACKAGE WEIGHT IS 0.137 GRAM.
D) ALL DIMENSIONS ARE IN MILLIMETERS.

DOCUMENT NUMBER:	**98AON13443G**	Electronic versions are uncontrolled except when accessed directly from the Document Repository. Printed versions are uncontrolled except when stamped "CONTROLLED COPY" in red.
DESCRIPTION:	**AXIAL LEAD**	**PAGE 1 OF 1**

onsemi and onsemi are trademarks of Semiconductor Components Industries, LLC dba **onsemi** or its subsidiaries in the United States and/or other countries. **onsemi** reserves the right to make changes without further notice to any products herein. **onsemi** makes no warranty, representation or guarantee regarding the suitability of its products for any particular purpose, nor does **onsemi** assume any liability arising out of the application or use of any product or circuit, and specifically disclaims any and all liability, including without limitation special, consequential or incidental damages. **onsemi** does not convey any license under its patent rights nor the rights of others.

MiniMELF / SOD−80
CASE 100AD
ISSUE O

DATE 30 APR 2012

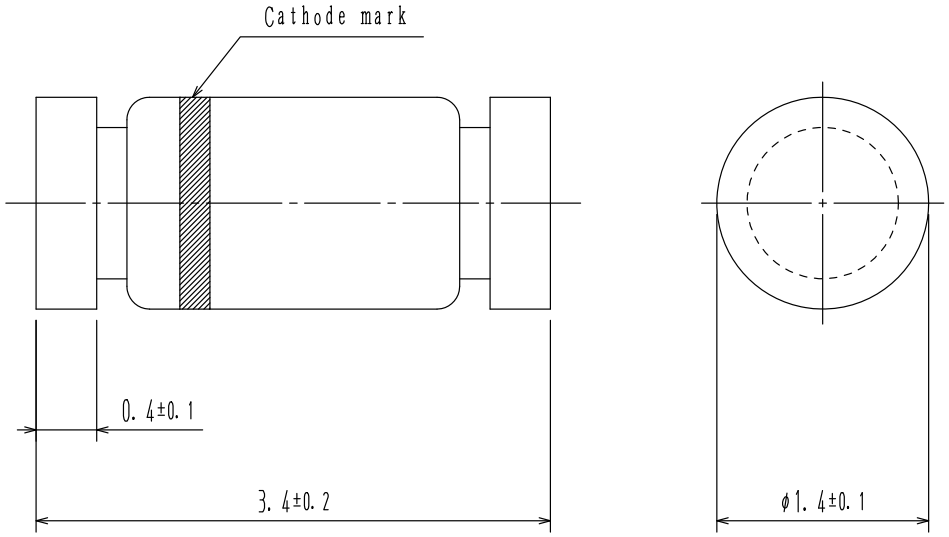

NOTES: UNLESS OTHERWISE SPECIFIED

A) PACKAGE STANDARD REFERENCE: JEDEC DO-213, VARIATION AC.

B) ALL DIMENSIONS ARE IN MILLIMETERS.

△C CORNER RADIUS IS OPTIONAL.

D) DRAWING FILE NAME: SOD80A REV01

DOCUMENT NUMBER:	**98AON79582E**	Electronic versions are uncontrolled except when accessed directly from the Document Repository. Printed versions are uncontrolled except when stamped "CONTROLLED COPY" in red.
DESCRIPTION:	**MINIMELF / SOD−80**	**PAGE 1 OF 1**

onsemi and onsemi are trademarks of Semiconductor Components Industries, LLC dba **onsemi** or its subsidiaries in the United States and/or other countries. **onsemi** reserves the right to make changes without further notice to any products herein. **onsemi** makes no warranty, representation or guarantee regarding the suitability of its products for any particular purpose, nor does **onsemi** assume any liability arising out of the application or use of any product or circuit, and specifically disclaims any and all liability, including without limitation special, consequential or incidental damages. **onsemi** does not convey any license under its patent rights nor the rights of others.

onsemi, onsemi, and other names, marks, and brands are registered and/or common law trademarks of Semiconductor Components Industries, LLC dba "**onsemi**" or its affiliates and/or subsidiaries in the United States and/or other countries. **onsemi** owns the rights to a number of patents, trademarks, copyrights, trade secrets, and other intellectual property. A listing of **onsemi**'s product/patent coverage may be accessed at www.onsemi.com/site/pdf/Patent−Marking.pdf. **onsemi** reserves the right to make changes at any time to any products or information herein, without notice. The information herein is provided "as−is" and **onsemi** makes no warranty, representation or guarantee regarding the accuracy of the information, product features, availability, functionality, or suitability of its products for any particular purpose, nor does **onsemi** assume any liability arising out of the application or use of any product or circuit, and specifically disclaims any and all liability, including without limitation special, consequential or incidental damages. Buyer is responsible for its products and applications using **onsemi** products, including compliance with all laws, regulations and safety requirements or standards, regardless of any support or applications information provided by **onsemi**. "Typical" parameters which may be provided in **onsemi** data sheets and/or specifications can and do vary in different applications and actual performance may vary over time. All operating parameters, including "Typicals" must be validated for each customer application by customer's technical experts. **onsemi** does not convey any license under any of its intellectual property rights nor the rights of others. **onsemi** products are not designed, intended, or authorized for use as a critical component in life support systems or any FDA Class 3 medical devices or medical devices with a same or similar classification in a foreign jurisdiction or any devices intended for implantation in the human body. Should Buyer purchase or use **onsemi** products for any such unintended or unauthorized application, Buyer shall indemnify and hold **onsemi** and its officers, employees, subsidiaries, affiliates, and distributors harmless against all claims, costs, damages, and expenses, and reasonable attorney fees arising out of, directly or indirectly, any claim of personal injury or death associated with such unintended or unauthorized use, even if such claim alleges that **onsemi** was negligent regarding the design or manufacture of the part. **onsemi** is an Equal Opportunity/Affirmative Action Employer. This literature is subject to all applicable copyright laws and is not for resale in any manner.

ADDITIONAL INFORMATION

TECHNICAL PUBLICATIONS:
Technical Library: www.onsemi.com/design/resources/technical−documentation
onsemi Website: www.onsemi.com

ONLINE SUPPORT: www.onsemi.com/support
For additional information, please contact your local Sales Representative at
www.onsemi.com/support/sales