213036
LVHT52-500G3-B4
Laser distance sensors

- IO-Link
- Accurate detection
- Large detection range
- Foreground and background suppression
- Laser class 1
- Red-light laser, with small laser spot
- Easy to operate
- Robust metal housing



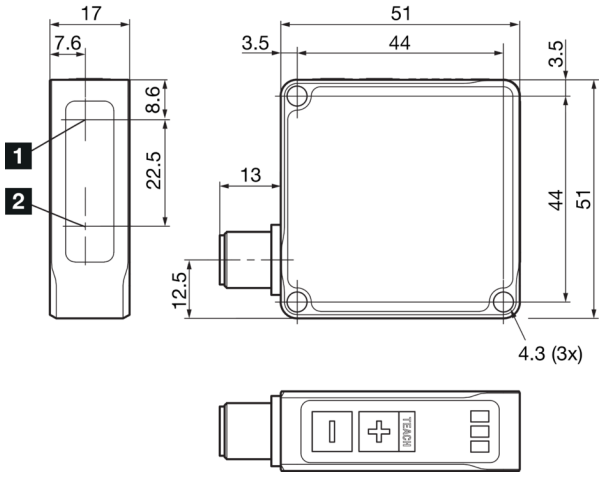

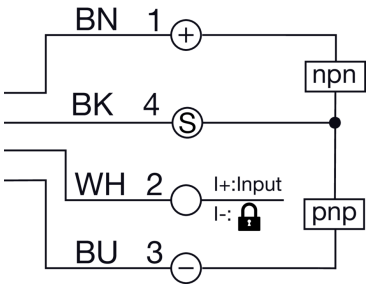

1) Light aperture 2) Receiver BK: black BN: brown BU: blue WH: white

Function

Technical data (typ.)	+20°C, 24 V DC
Service voltage	18 … 30 V DC
No-load current (max.)	60 mA
Insulation voltage endurance	500 V
Housing dimensions	51 x 51 x 17 mm
Housing length	51 mm
Housing height	51 mm
Housing width	17 mm
Housing material	Die-cast zinc (Black, powder-coated)
Material window / optics	Plastic
Weight	102 g
Protection class	III, operation on protective low voltage
Approvals	UL
Design	Cuboid design
Switching output	Push-pull (1x), 100 mA, NO/NC
Voltage drop (max.)	2 V
Interface	■ IO-Link V1.1, COM2 ■ Smart Sensor Profile
Light source	Laser
Laser class	CLASS 1 LASER PRODUCT, (IEC 60825-1:2014 / EN 60825-1:2014)
Color	Red

213036
LVHT52-500G3-B4
Laser distance sensors

Technical data (typ.)	+20°C, 24 V DC
Wavelength	650 nm (Pp < 0.65 mW t = 4 µs)
Light spot size	Ø 1.0 mm
Measuring range	50 … 500 mm
Measuring range 1	50 … 300 mm (6 to 90 % remission)
Measuring range 2	300 … 500 mm (6 to 90 % remission)
Resolution	0.3 … 0.50 mm (0.3 mm at 50 ... 300 mm, mode: standard, mean value 16, 0.5 mm at 300 ... 500 mm, mode: standard, mean value 16)
Reproducibility	0.5 mm
Reproducibility	0.5 mm at 50 ... 300 mm, mode: standard, mean value 16, 1.0 mm at 300 ... 500 mm, mode: standard, mean value 16
Sensitivity adjustment	Keypad
Display	LED green - Status, yellow - Switching output, Red - Signal weak
Switching frequency	100 Hz (Max. 600 Hz in Speed sensor mode without filter)
Readiness delay (max.)	300 ms
Shock/vibration load	30 g, 10 … 55 Hz / 0.5 mm
Ambient temperature during operation	0 … +50 °C
Temperature drift	0.04 %/K
Protection type	IP 67
Connection	Connector, M12, 4-pin
Connection cable	VK … /5

More information / accessories	https://www.di-soric.com/213036

© di-soric . Right to change reserved