Power tap; for busbar; with fuse; Clamping connection

www.wago.com/855-8015

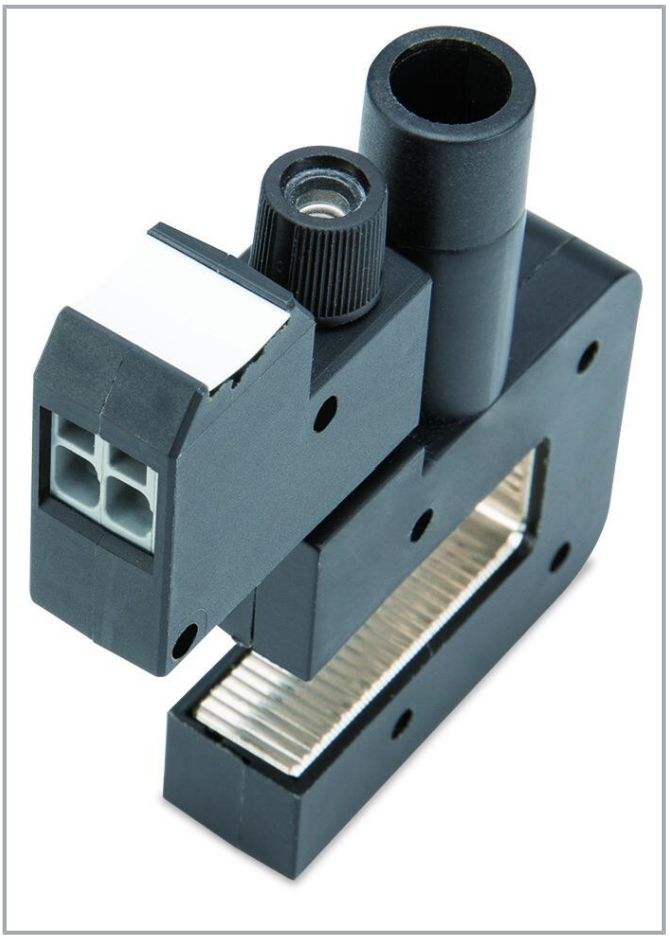

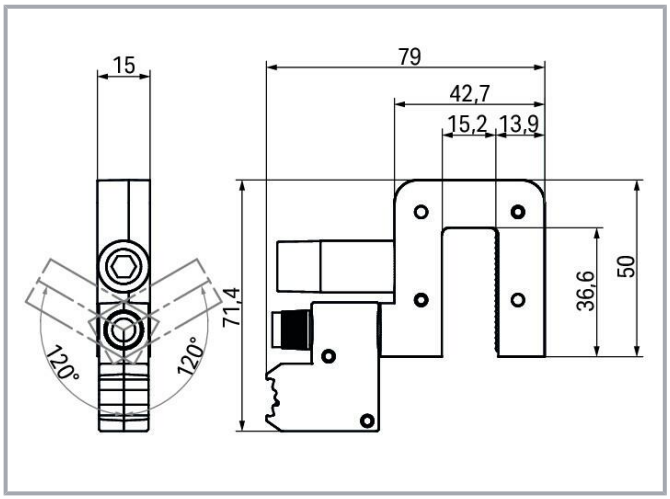

Item description

Short description:

WAGO's Voltage Taps serve as busbar taps for measuring L- or N-conductors and are equipped with an integrated SIBA fuse with indicator. The built-in fuse is located directly above the voltage-carrying busbar. In the event of an overload and short circuit, the downstream measurement unit is safely disconnected before major damage occurs.

The voltage taps can be mounted directly on the busbar. Clamp mount via Allen screw is performed using an insulated Allen wrench and provides an excellent contact between the busbar and the fuse. This ensures high operational safety and short-circuit protection.

The measurement line is connected via Push-in CAGE CLAMP®, the universal connection technology for all conductor types that provides the simplicity of push-in terminations. Rigid conductors, such as solid and stranded conductors, as well as fine-stranded conductors with ferrules, can

WAGO GmbH & Co. KG
Hansastr. 27
32423 Minden
Phone: +49571 887-0 | Fax: +49571 887-169
Email: info.de@wago.com | Web: www.wago.com

Do you have any questions about our products?
We are always happy to take your call at +49 (571) 887-44222.

be terminated by simply pushing them in – no operating tool needed. The connection unit with a fuse and Push-in CAGE CLAMP® rotates (±120°). This creates additional added value by directly guiding subsequent wiring into the cable channel.

In addition, the voltage taps can be labeled with two different marking options.

Features:

- Fuse-protected voltage tap for measurement purposes
- Safe protection through integrated fuse with indicator (measurement line/device)
- WAGO push-in termination technology
- WAGO labeling options (WMB markers or marking strips)

Data

Notes

Note	Spare fuse: WAGO 855-8020

Technical data

Input

Measured variable	Voltage

Output – voltage tap

Fuse (voltage path)	2 A; 450 V; F; 70 kA; 5 x 25 mm (WAGO 855-8020)
Rated voltage	AC 400 V

Connection data

Busbar thickness (min.)	4 mm
Busbar thickness (max.)	15 mm

Connection 1

Connection technology	Push-in CAGE CLAMP®
WAGO connector	WAGO 2624 Series
Strip length	10 … 12 mm / 0.39 … 0.47 inches
Solid conductor	0.2 … 6 mm² / 24 … 10 AWG
Fine-stranded conductor	0.2 … 6 mm² / 24 … 10 AWG

WAGO GmbH & Co. KG
Hansastr. 27
32423 Minden
Phone: +49571 887-0 | Fax: +49571 887-169
Email: info.de@wago.com | Web: www.wago.com

Physical data

Width	79 mm / 3.11 inches
Height	15 mm / 0.591 inches
Depth	72 mm / 2.835 inches

Mechanical data

Mounting type	Clamp mount
Mounting type	Installation on busbar

Material data

Weight	160 g

Environmental requirements

Ambient temperature (operation)	-25 … +70 °C
Ambient temperature (storage)	-40 … +85 °C
Relative humidity	5 … 85 % (without condensation)
Operating altitude (max.)	2000 m

Standards and specifications

Standards/specifications	IEC 60947-7-3

Commercial data

eCl@ss 10.0	27-14-11-92
eCl@ss 9.0	27-14-11-92
ETIM 8.0	EC002848
ETIM 7.0	EC002848
ECCN	NO DATA
PU (SPU)	1 pcs
Packaging type	Bag
Country of origin	NL
Customs tariff number	85366990990

Environmental Product Compliance

RoHS Compliance Status	Compliant,No Exemption

Subject to changes. Please also observe the further product documentation!

WAGO GmbH & Co. KG
Hansastr. 27
32423 Minden
Phone: +49571 887-0 | Fax: +49571 887-169
Email: info.de@wago.com | Web: www.wago.com

Do you have any questions about our products?
We are always happy to take your call at +49 (571) 887-44222.

Approvals / Certificates

General approvals

Logo	Approval	Additional Approval Text	Certificate name
	EAC GZO Almaty Standart	TP TC 004/2011	EAC CoC 03082

Declarations of conformity and manufacturer's declarations

Logo	Approval	Additional Approval Text	Certificate name
	EU-Declaration of Conformity WAGO GmbH & Co. KG	-	-

Optional accessories

Fuse

Fuse



Item no.: 855-8020
Miniature fuse; 5 x 25 mm; with indicator

www.wago.com/855-8020

Mounting

Current transformer terminal block



Item no.: 2007-8874
Compact terminal block; for current and voltage transformers; 6,00 mm²; multicoloured

www.wago.com/2007-8874



Item no.: 2007-8877
Compact terminal block; for current transformer circuit; 6,00 mm²; multicoloured

www.wago.com/2007-8877



Item no.: 2007-8875
Compact terminal block; for current transformer circuit; 6,00 mm²; multicoloured

www.wago.com/2007-8875



Item no.: 2007-8876
Compact terminal block; for 3-phase current transformer circuit; 6,00 mm²; multicoloured

www.wago.com/2007-8876

Subject to changes. Please also observe the further product documentation!

WAGO GmbH & Co. KG
Hansastr. 27
32423 Minden
Phone: +49571 887-0 | Fax: +49571 887-169
Email: info.de@wago.com | Web: www.wago.com

Do you have any questions about our products?
We are always happy to take your call at +49 (571) 887-44222.



Item no.: 2007-8873
Compact terminal block; for current and voltage transformers; 6,00 mm²; multicoloured
www.wago.com/2007-8873

Signal conditioner

Power measurement module



Item no.: 2857-570/024-001
3-Phase Power Measurement Module; 3x277/480 V/1 A; Modbus RTU; Digital output; Configuration via software; Supply voltage: 24 VDC
www.wago.com/2857-570/024-001



Item no.: 2857-570/024-005
3-Phase Power Measurement Module; 3x277/480 V/5 A; Modbus RTU; Digital output; Configuration via software; Supply voltage: 24 VDC
www.wago.com/2857-570/024-005



Item no.: 2857-570/024-000
3-Phase Power Measurement Module; 3x277/480 V/RC; Modbus RTU; Digital output; Configuration via software; Supply voltage: 24 VDC
www.wago.com/2857-570/024-000

Voltage signal conditioner



Item no.: 857-560
Voltage signal conditioner; Voltage input signal; Current and voltage output signal; Digital output; Configuration via software; Supply voltage: 24 VDC; 6 mm module width
www.wago.com/857-560

Current signal conditioner



Item no.: 857-569
Power signal conditioner; Current and voltage input signal; Current and voltage output signal; Digital output; Configuration via software; Supply voltage: 24 VDC; 6 mm module width
www.wago.com/857-569

Tool

Operating tool



Item no.: 855-8000
Allen wrench; with a partially insulated shaft
www.wago.com/855-8000

Downloads

Documentation

Bid Text

855-8015 docx - Datei	2019 年2月20 日	docx 17.8 kB	Download
855-8015 X81 - Datei	2019 年2月19 日	xml 4.9 kB	Download

Subject to changes. Please also observe the further product documentation!

WAGO GmbH & Co. KG
Hansastr. 27
32423 Minden
Phone: +49571 887-0 | Fax: +49571 887-169
Email: info.de@wago.com | Web: www.wago.com

Do you have any questions about our products?
We are always happy to take your call at +49 (571) 887-44222.

Instruction Leaflet

Potentialabgriffe	V 1.0.0	pdf 736.5 kB	Download

Additional Information

Disposal and Recycling Electrical and electronic equipment, Batteries, Packaging	V 1.1.0 2022 年8月18 日	pdf 2.2 MB	Download

Environmental Product Compliance

Compliance Search

Environmental Product Compliance 855-8015 Power tap; for busbar; with fuse; Clamping connection	URL	Download

Installation Notes

Installation

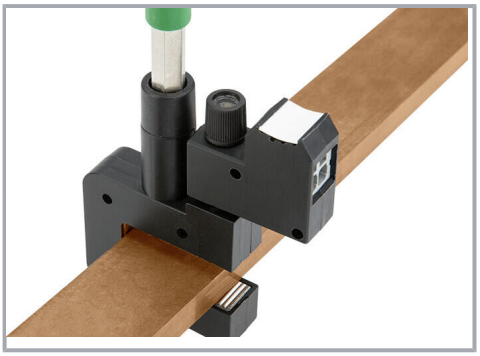

Installation on busbar; fastening with Allen wrench

Installation

WAGO GmbH & Co. KG
Hansastr. 27
32423 Minden
Phone: +49571 887-0 | Fax: +49571 887-169
Email: info.de@wago.com | Web: www.wago.com

Do you have any questions about our products?
We are always happy to take your call at +49 (571) 887-44222.

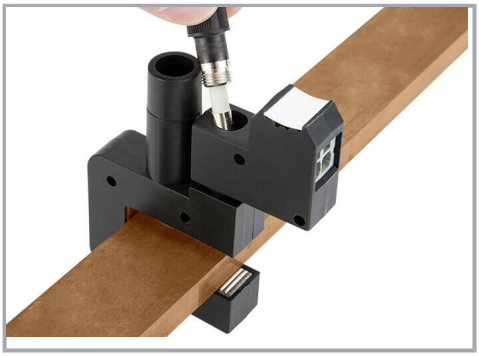

Integrated SIBA fuse (overload and short circuit protection)

Installation

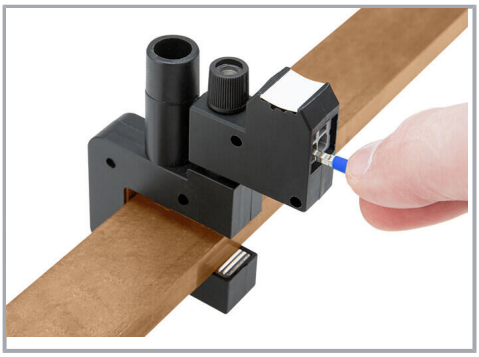

Push-in CAGE CLAMP® connection technology

Subject to changes. Please also observe the further product documentation!

WAGO GmbH & Co. KG
Hansastr. 27
32423 Minden
Phone: +49571 887-0 | Fax: +49571 887-169
Email: info.de@wago.com | Web: www.wago.com

Do you have any questions about our products?
We are always happy to take your call at +49 (571) 887-44222.