# High Speed Infrared Emitting Diodes, 940 nm, Surface Emitter Technology

VSMY2941RGX01



VSMY2941GX01



## DESCRIPTION

As part of the SurfLight™ portfolio, the VSMY2941X01 series are infrared, 940 nm emitting diodes based on GaAlAs surface emitter chip technology with extreme high radiant intensities, high optical power and high speed, molded in clear, untinted plastic packages (with lens) for surface mounting (SMD).

## APPLICATIONS

- Miniature light barrier
- Photointerrupters
- Optical switch
- Emitter source for proximity sensors

## FEATURES

- Package type: surface-mount
- Package form: GW, RGW
- Dimensions (L x W x H in mm): 2.3 x 2.3 x 2.8
- Peak wavelength: $\lambda_p$ = 940 nm
- AEC-Q101 qualified
- High radiant power
- Very high radiant intensity
- Angle of half intensity: φ = ± 8°
- Terminal configurations: gullwing or reverse gullwing
- Package matches with detector VEMD2000X01 series
- Floor life: 4 weeks, MSL 2a, according to J-STD-020
- Material categorization: for definitions of compliance please see www.vishay.com/doc?99912

AUTOMOTIVE GRADE

Pb-free

e3

RoHS COMPLIANT

HALOGEN FREE GREEN (5-2008)

## PRODUCT SUMMARY

| COMPONENT | $I_e$ (mW/sr) | φ (deg) | $\lambda_p$ (nm) | $t_r$ (ns) |
|---|---|---|---|---|
| VSMY2941RGX01 | 160 | ± 8 | 940 | 5 |
| VSMY2941GX01 | 160 | ± 8 | 940 | 5 |

**Note**

- Test conditions see table “Basic Characteristics“

## ORDERING INFORMATION

| ORDERING CODE | PACKAGING | REMARKS | PACKAGE FORM |
|---|---|---|---|
| VSMY2941RGX01 | Tape and reel | MOQ: 6000 pcs, 6000 pcs/reel | Reverse gullwing |
| VSMY2941GX01 | Tape and reel | MOQ: 6000 pcs, 6000 pcs/reel | Gullwing |

**Note**

- MOQ: minimum order quantity

## ABSOLUTE MAXIMUM RATINGS ($T_{amb}$ = 25 °C, unless otherwise specified)

| PARAMETER | TEST CONDITION | SYMBOL | VALUE | UNIT |
|---|---|---|---|---|
| Reverse voltage | | $V_R$ | 5 | V |
| Forward current | | $I_F$ | 70 | mA |
| Peak forward current | $t_p/T$ = 0.5, $t_p$ = 100 µs | $I_{FM}$ | 140 | mA |
| Surge forward current | $t_p$ = 100 µs | $I_{FSM}$ | 500 | mA |
| Power dissipation | | $P_V$ | 120 | mW |
| Junction temperature | | $T_j$ | 100 | °C |
| Operating temperature range | | $T_{amb}$ | -40 to +85 | °C |
| Storage temperature range | | $T_{stg}$ | -40 to +100 | °C |
| Soldering temperature | According to Fig. 10, J-STD-020 | $T_{sd}$ | 260 | °C |
| Thermal resistance junction-to-ambient | J-STD-051, soldered on PCB | $R_{thJA}$ | 250 | K/W |



For technical questions, contact: emittertechsupport@vishay.com

THIS DOCUMENT IS SUBJECT TO CHANGE WITHOUT NOTICE. THE PRODUCTS DESCRIBED HEREIN AND THIS DOCUMENT ARE SUBJECT TO SPECIFIC DISCLAIMERS, SET FORTH AT www.vishay.com/doc?91000

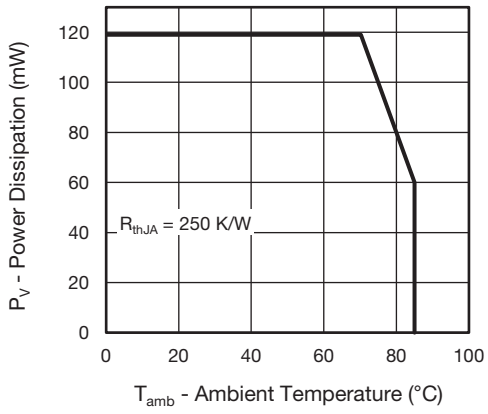


Fig. 1 - Power Dissipation Limit vs. Ambient Temperature

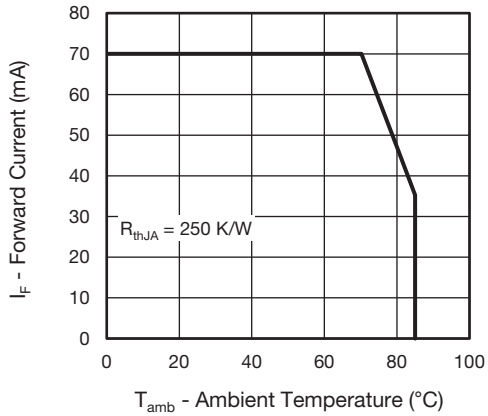


Fig. 2 - Forward Current Limit vs. Ambient Temperature

| **BASIC CHARACTERISTICS** ($T_{amb}$ = 25 °C, unless otherwise specified) | | | | | | |
|---|---|---|---|---|---|---|
| **PARAMETER** | **TEST CONDITION** | **SYMBOL** | **MIN.** | **TYP.** | **MAX.** | **UNIT** |
| Forward voltage | $I_F$ = 50 mA, $t_p$ = 20 ms | $V_F$ | - | 1.4 | 1.7 | V |
| | $I_F$ = 70 mA, $t_p$ = 20 ms | $V_F$ | - | 1.5 | - | V |
| | $I_F$ = 500 mA, $t_p$ = 100 µs | $V_F$ | - | 2.6 | - | V |
| Temperature coefficient of $V_F$ | $I_F$ = 50 mA | $TK_{VF}$ | - | -0.7 | - | mV/K |
| Reverse current | | $I_R$ | Not designed for reverse operation | | | µA |
| Junction capacitance | $V_R$ = 0 V, f = 1 MHz, E = 0 mW/cm² | $C_J$ | - | 30 | - | pF |
| Radiant intensity | $I_F$ = 50 mA, $t_p$ = 20 ms | $I_e$ | 60 | 115 | 170 | mW/sr |
| | $I_F$ = 70 mA, $t_p$ = 20 ms | $I_e$ | - | 160 | - | mW/sr |
| | $I_F$ = 500 mA, $t_p$ = 100 µs | $I_e$ | - | 850 | - | mW/sr |
| Radiant power | $I_F$ = 70 mA, $t_p$ = 20 ms | $\phi_e$ | - | 40 | - | mW |
| Temperature coefficient of radiant power | $I_F$ = 50 mA | $TK\phi_e$ | - | -0.2 | - | %/K |
| Angle of half intensity | | $\varphi$ | - | ± 8 | - | deg |
| Peak wavelength | $I_F$ = 50 mA | $\lambda_p$ | 920 | 940 | 960 | nm |
| Spectral bandwidth | $I_F$ = 70 mA | $\Delta\lambda$ | - | 55 | - | nm |
| Temperature coefficient of $\lambda_p$ | $I_F$ = 70 mA | $TK\lambda_p$ | - | 0.28 | - | nm/K |
| Rise time | $I_F$ = 70 mA, 10 % to 90 % | $t_r$ | - | 5 | - | ns |
| Fall time | $I_F$ = 70 mA, 10 % to 90 % | $t_f$ | - | 6 | - | ns |


For technical questions, contact: emittertechsupport@vishay.com
THIS DOCUMENT IS SUBJECT TO CHANGE WITHOUT NOTICE. THE PRODUCTS DESCRIBED HEREIN AND THIS DOCUMENT ARE SUBJECT TO SPECIFIC DISCLAIMERS, SET FORTH AT www.vishay.com/doc?91000

**BASIC CHARACTERISTICS** ($T_{amb}$ = 25 °C, unless otherwise specified)

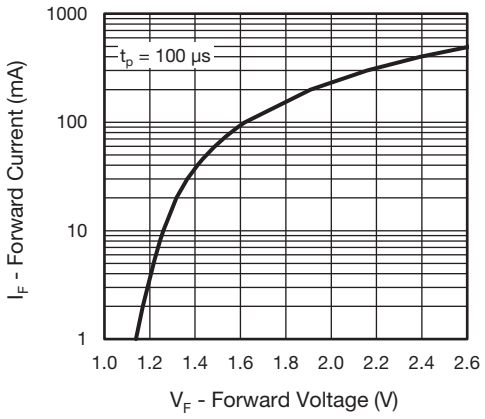


Fig. 3 - Forward Current vs. Forward Voltage

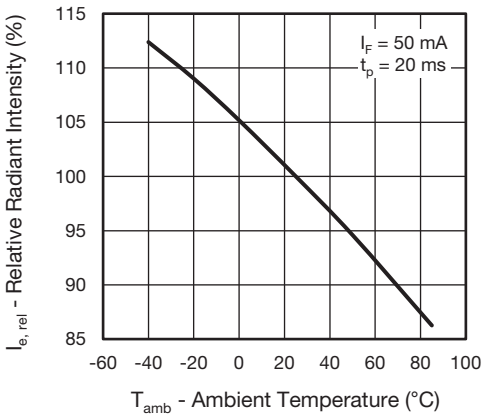


Fig. 6 - Relative Radiant Intensity vs. Ambient Temperature

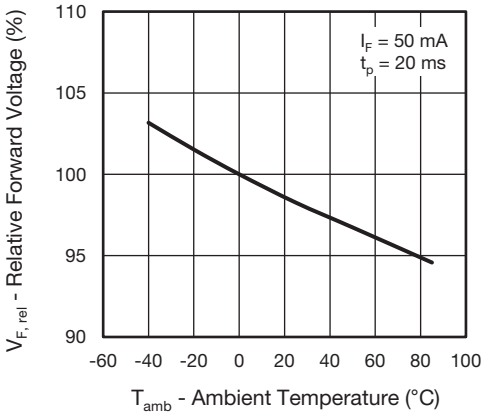


Fig. 4 - Relative Forward Voltage vs. Ambient Temperature

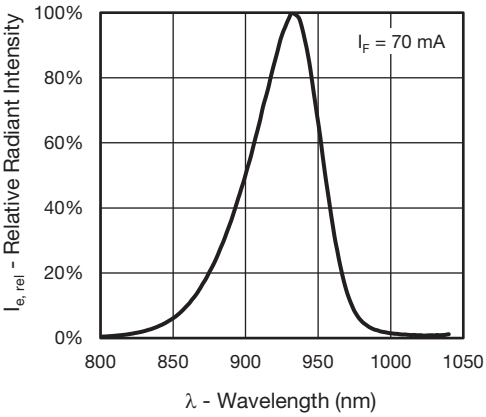


Fig. 7 - Relative Radiant Intensity vs. Wavelength

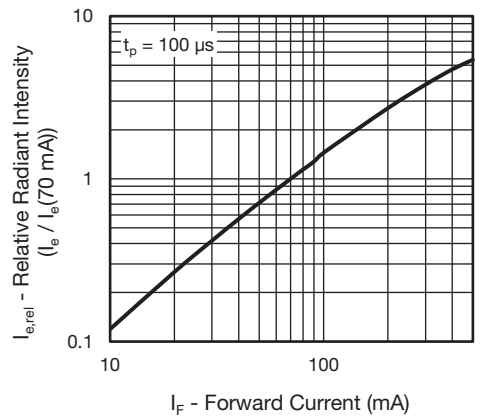


Fig. 5 - Radiant Intensity vs. Forward Current

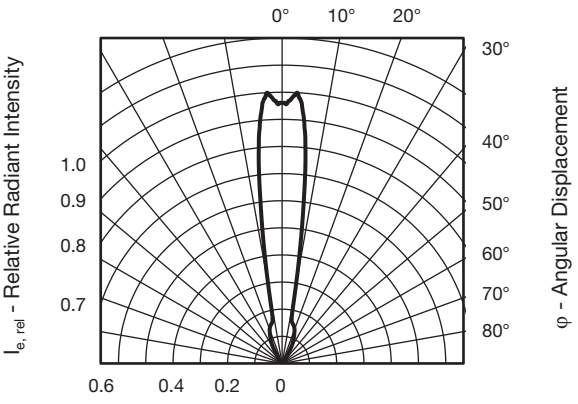


Fig. 8 - Relative Radiant Intensity vs. Angular Displacement


For technical questions, contact: emittertechsupport@vishay.com
THIS DOCUMENT IS SUBJECT TO CHANGE WITHOUT NOTICE. THE PRODUCTS DESCRIBED HEREIN AND THIS DOCUMENT ARE SUBJECT TO SPECIFIC DISCLAIMERS, SET FORTH AT www.vishay.com/doc?91000

## SOLDER PROFILE

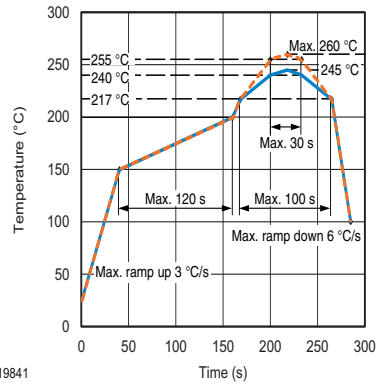


Fig. 9 - Lead (Pb)-free Reflow Solder Profile
According to J-STD-020

## DRYPACK

Devices are packed in moisture barrier bags (MBB) to prevent the products from moisture absorption during transportation and storage. Each bag contains a desiccant.

## FLOOR LIFE

Floor life (time between soldering and removing from MBB) must not exceed the time indicated on MBB label:
Floor life: 4 weeks
Conditions: $T_{amb}$ < 30 °C, RH < 60 %
Moisture sensitivity level 2a, according to J-STD-020.

## DRYING

In case of moisture absorption devices should be baked before soldering. Conditions see J-STD-020 or label. Devices taped on reel dry using recommended conditions 192 h at 40 °C (+ 5 °C), RH < 5 %.

## PACKAGE DIMENSIONS in millimeters: VSMY2941RGX01

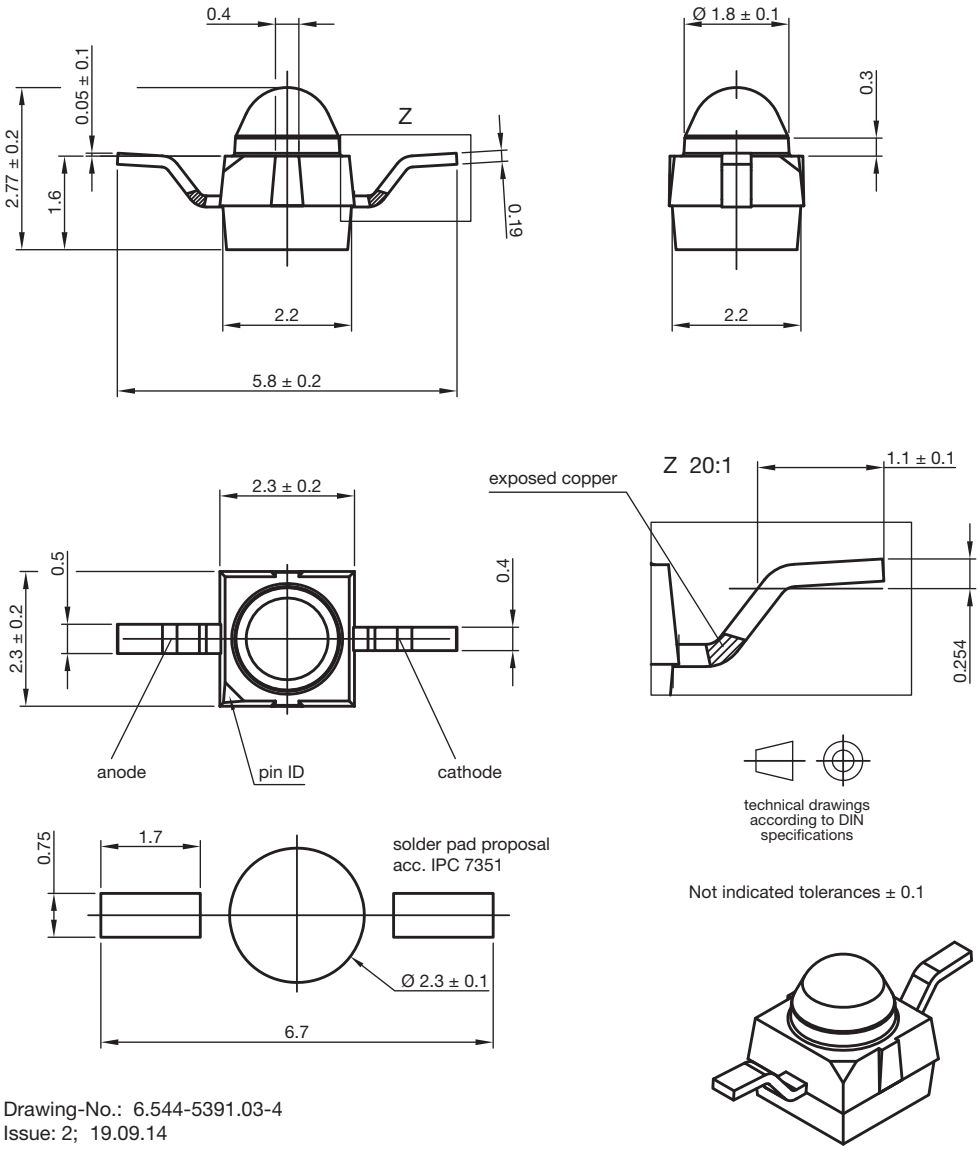


Drawing-No.: 6.544-5391.03-4
Issue: 2; 19.09.14


For technical questions, contact: emittertechsupport@vishay.com
THIS DOCUMENT IS SUBJECT TO CHANGE WITHOUT NOTICE. THE PRODUCTS DESCRIBED HEREIN AND THIS DOCUMENT ARE SUBJECT TO SPECIFIC DISCLAIMERS, SET FORTH AT www.vishay.com/doc?91000

**PACKAGE DIMENSIONS** in millimeters: **VSMY2941GX01**

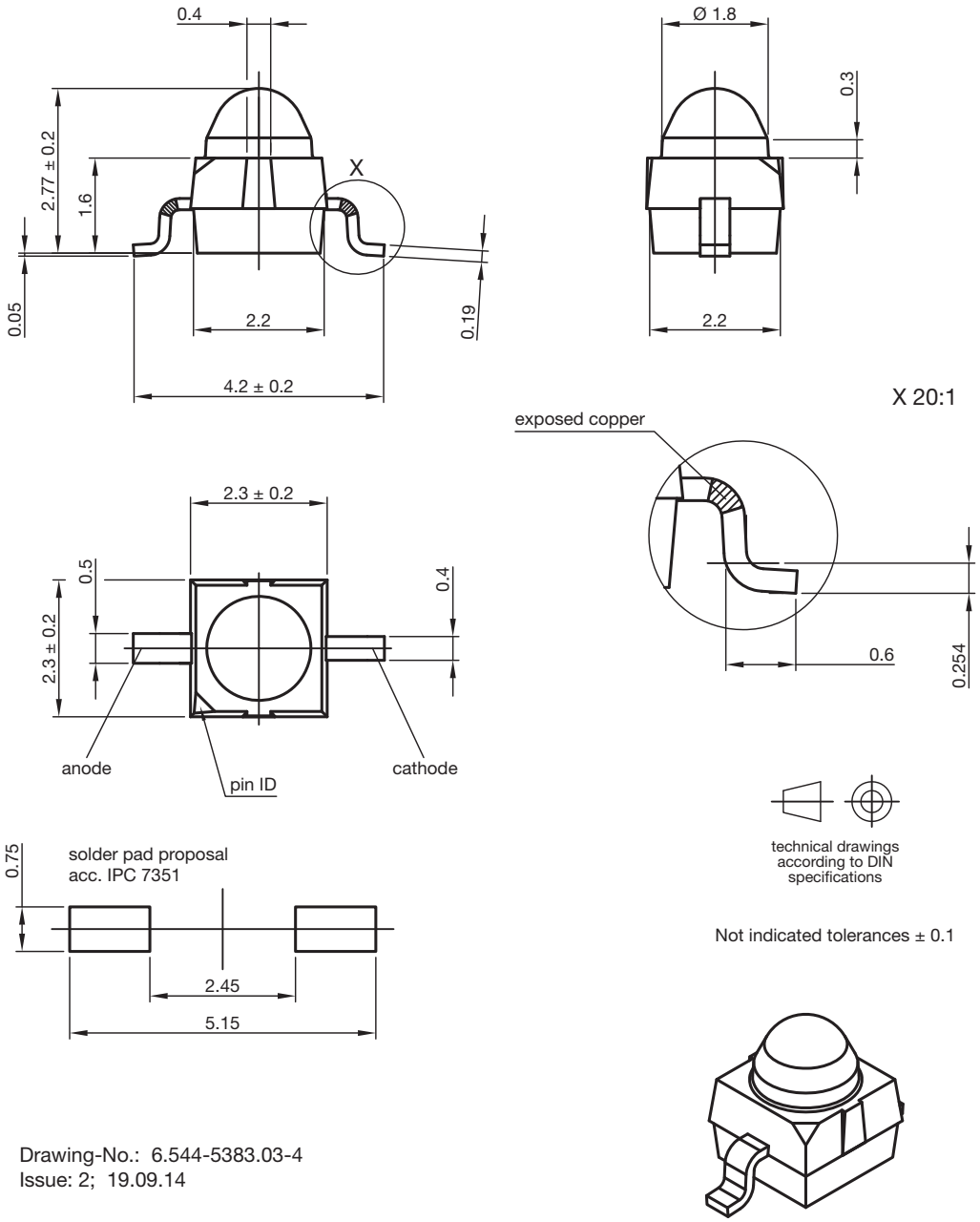


Drawing-No.: 6.544-5383.03-4
Issue: 2; 19.09.14


For technical questions, contact: emittertechsupport@vishay.com
THIS DOCUMENT IS SUBJECT TO CHANGE WITHOUT NOTICE. THE PRODUCTS DESCRIBED HEREIN AND THIS DOCUMENT ARE SUBJECT TO SPECIFIC DISCLAIMERS, SET FORTH AT www.vishay.com/doc?91000

## **TAPING AND REEL DIMENSIONS** in millimeters: **VSMY2941RGX01**

Reel

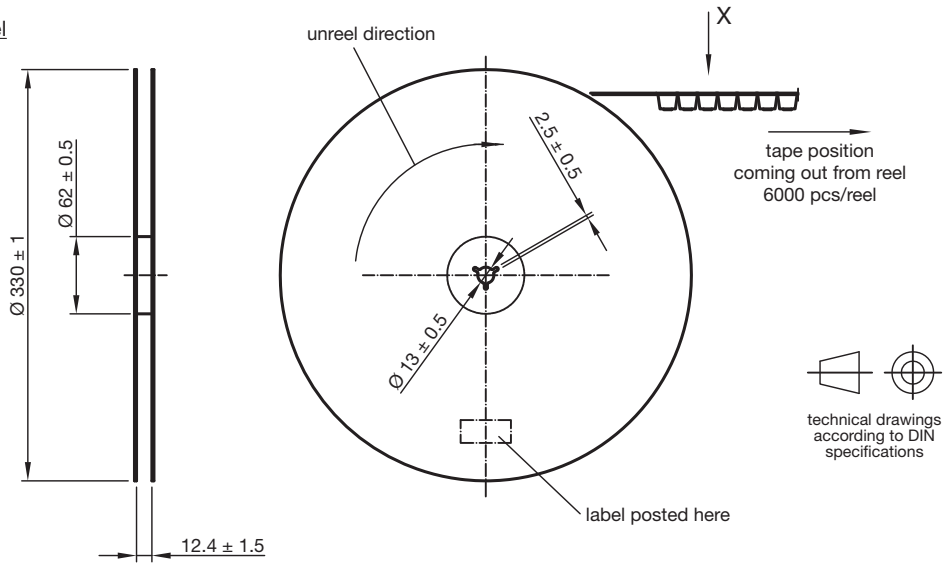


Leader and trailer tape

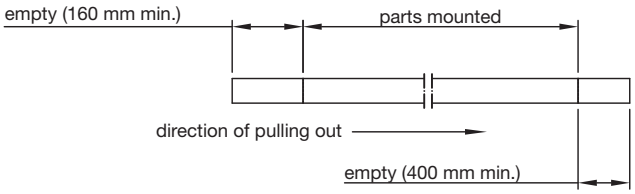


Terminal position in tape

| Device | Lead I | Lead II |
|---|---|---|
| VEMT2000 | Collector | Emitter |
| VEMT2500 | | |
| VEMD2000 | Cathode | Anode |
| VEMD2500 | | |
| VSMB2000 | | |
| VSMG2000 | | |
| VSMF2890RG | | |
| VSMY2850RG | Anode | Cathode |
| VSMY2940RG | | |

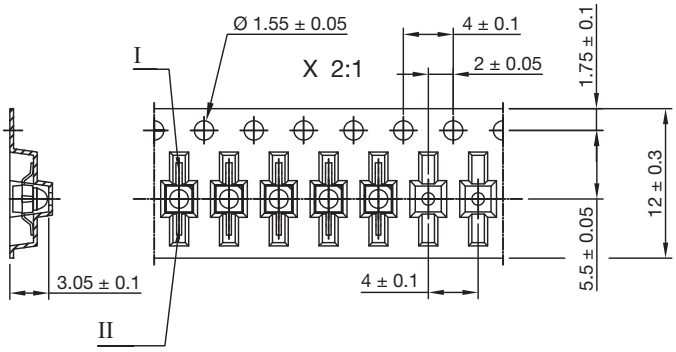


Drawing-No.: 9.800-5100.01-4
Issue: 4; 19.09.14


For technical questions, contact: emittertechsupport@vishay.com
THIS DOCUMENT IS SUBJECT TO CHANGE WITHOUT NOTICE. THE PRODUCTS DESCRIBED HEREIN AND THIS DOCUMENT ARE SUBJECT TO SPECIFIC DISCLAIMERS, SET FORTH AT www.vishay.com/doc?91000

## **TAPING AND REEL DIMENSIONS** in millimeters: **VSMY2941GX01**

Reel

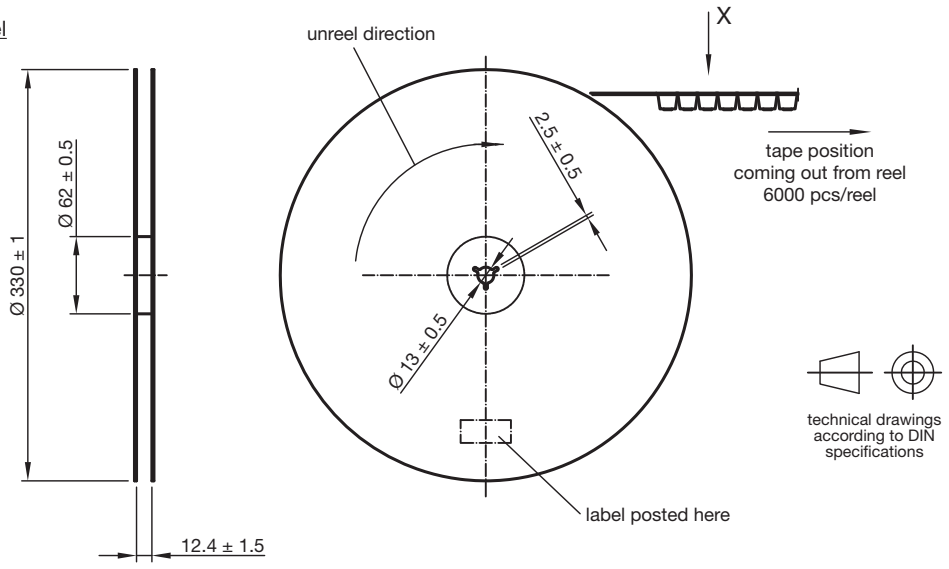


Leader and trailer tape

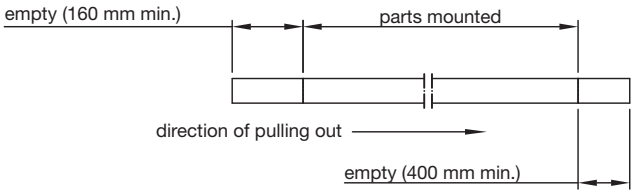


Terminal position in tape

| Device | Lead I | Lead II |
|---|---|---|
| VSMB2020 | Cathode | Anode |
| VSMG2020 | | |
| VEMD2020 | | |
| VEMD2520 | | |
| VSMF2890G | | |
| VEMT2020 | Collector | Emitter |
| VEMT2520 | | |
| VSMY2850G | Anode | Cathode |
| VSMY2940G | | |

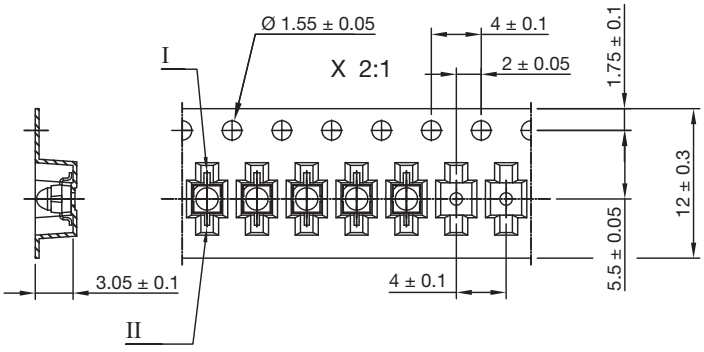


Drawing-No.: 9.800-5091.01-4
Issue: 5; 19.09.14


For technical questions, contact: emittertechsupport@vishay.com
THIS DOCUMENT IS SUBJECT TO CHANGE WITHOUT NOTICE. THE PRODUCTS DESCRIBED HEREIN AND THIS DOCUMENT ARE SUBJECT TO SPECIFIC DISCLAIMERS, SET FORTH AT www.vishay.com/doc?91000

# Disclaimer

ALL PRODUCT, PRODUCT SPECIFICATIONS AND DATA ARE SUBJECT TO CHANGE WITHOUT NOTICE TO IMPROVE RELIABILITY, FUNCTION OR DESIGN OR OTHERWISE.

Vishay Intertechnology, Inc., its affiliates, agents, and employees, and all persons acting on its or their behalf (collectively, “Vishay”), disclaim any and all liability for any errors, inaccuracies or incompleteness contained in any datasheet or in any other disclosure relating to any product.

Vishay makes no warranty, representation or guarantee regarding the suitability of the products for any particular purpose or the continuing production of any product. To the maximum extent permitted by applicable law, Vishay disclaims (i) any and all liability arising out of the application or use of any product, (ii) any and all liability, including without limitation special, consequential or incidental damages, and (iii) any and all implied warranties, including warranties of fitness for particular purpose, non-infringement and merchantability.

Statements regarding the suitability of products for certain types of applications are based on Vishay's knowledge of typical requirements that are often placed on Vishay products in generic applications. Such statements are not binding statements about the suitability of products for a particular application. It is the customer's responsibility to validate that a particular product with the properties described in the product specification is suitable for use in a particular application. Parameters provided in datasheets and / or specifications may vary in different applications and performance may vary over time. All operating parameters, including typical parameters, must be validated for each customer application by the customer's technical experts. Product specifications do not expand or otherwise modify Vishay's terms and conditions of purchase, including but not limited to the warranty expressed therein.

Hyperlinks included in this datasheet may direct users to third-party websites. These links are provided as a convenience and for informational purposes only. Inclusion of these hyperlinks does not constitute an endorsement or an approval by Vishay of any of the products, services or opinions of the corporation, organization or individual associated with the third-party website. Vishay disclaims any and all liability and bears no responsibility for the accuracy, legality or content of the third-party website or for that of subsequent links.

Except as expressly indicated in writing, Vishay products are not designed for use in medical, life-saving, or life-sustaining applications or for any other application in which the failure of the Vishay product could result in personal injury or death. Customers using or selling Vishay products not expressly indicated for use in such applications do so at their own risk. Please contact authorized Vishay personnel to obtain written terms and conditions regarding products designed for such applications.

No license, express or implied, by estoppel or otherwise, to any intellectual property rights is granted by this document or by any conduct of Vishay. Product names and markings noted herein may be trademarks of their respective owners.

*© 2024 VISHAY INTERTECHNOLOGY, INC. ALL RIGHTS RESERVED*