Apr.1.2024 Copyright 2024 HIROSE ELECTRIC CO., LTD. All Rights Reserved.
In case of consideration for using Automotive equipment / device which demand high reliability, kindly contact our sales window correspondents.

HRS DRAWING FOR REFERENCE

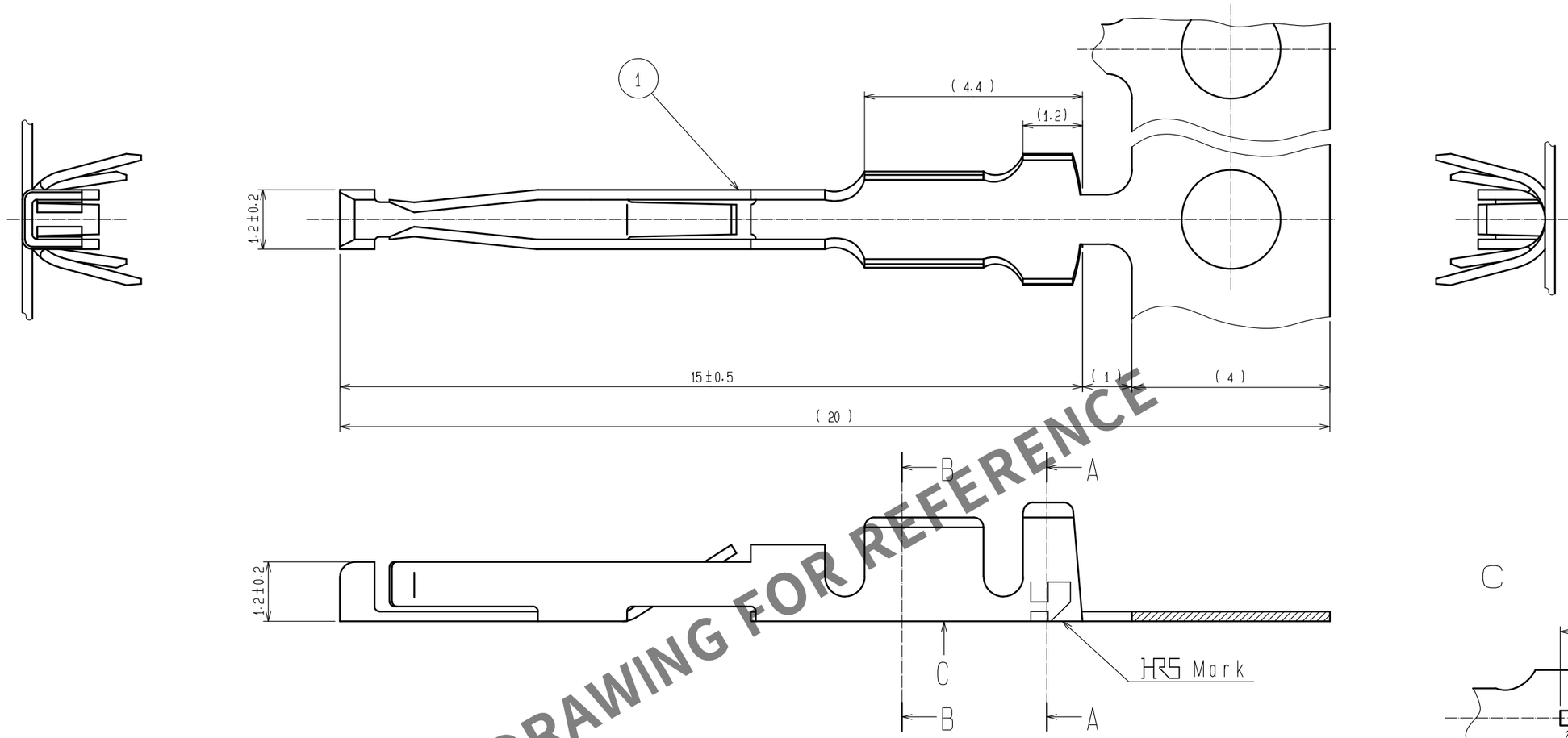

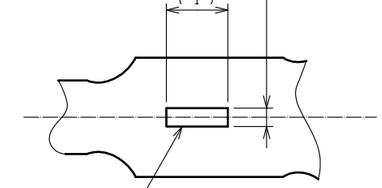

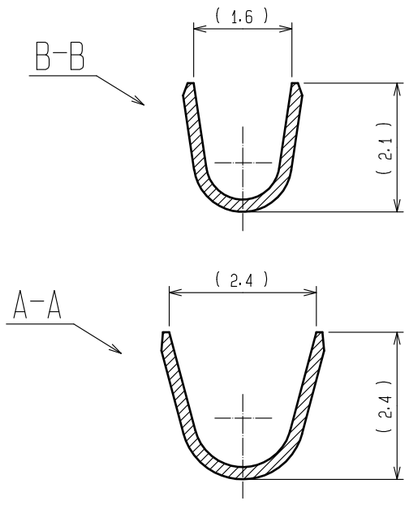

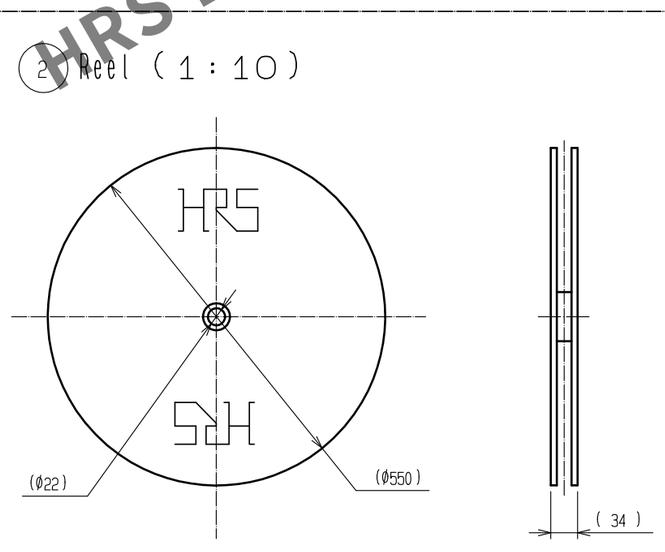

Note 1 Applicable wire : AWG#18 TO 22

NO.	MATERIAL	FINISH , REMARKS	NO.	MATERIAL	FINISH , REMARKS
1	Phosphor bronze	Silver plating (10,000pcs/bag)	2	Carton	(Terminal winding reel)

UNITS	SCALE		COUNT	DESCRIPTION OF REVISIONS	DESIGNED	CHECKED	DATE
mm	10 : 1	0					

HIROSE ELECTRIC CO., LTD.

APPROVED	EJ. KUNII	16. 02. 25
CHECKED	EJ. KUNII	16. 02. 25
DESIGNED	MM. ISHII	16. 02. 24
DRAWN	MM. ISHII	16. 02. 24

DRAWING NO.	EDC-010243-00-00
PART NO.	RP17-SC-212
CODE NO.	CL113-0509-2-00

0 1/1