TTC-6-FC-UT - Fuse holder

1054762

https://www.phoenixcontact.com/us/products/1054762

Please be informed that the data shown in this PDF document is generated from our online catalog. Please find the complete data in the user documentation. Our general terms of use for downloads are valid.



Fuse carrier for surge protective devices of the TERMITRAB complete product range with screw connection technology. Multi-level connection on TTC-6 housings possible. For conventional 5x20 mm miniature fuses.

Commercial data

Item number	1054762
Packing unit	1 pc
Minimum order quantity	1 pc
Sales key	CL02
Product key	CL216Z
Catalog page	Page 127 (C-4-2019)
GTIN	4055626690896
Weight per piece (including packing)	8.53 g
Weight per piece (excluding packing)	4.93 g
Customs tariff number	85363010
Country of origin	DE

Technical data

Product properties

Product type	Fuse module
Product family	TERMITRAB complete

Insulation characteristics

Overvoltage category	III
Pollution degree	2

Connection data

Connection method	Screw connection
Screw thread	M3
Tightening torque	0.5 Nm
Conductor cross section flexible	0.2 mm² ... 2.5 mm²
Conductor cross section rigid	0.2 mm² ... 4 mm²
Conductor cross section AWG	24 ... 12

Dimensions

Dimensional drawing	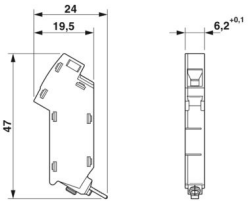
Width	6.2 mm +0.1 mm
Height	24 mm
Depth	47 mm

Material specifications

Color	gray (RAL 7042)
Flammability rating according to UL 94	V-0
Housing material	PBT

Mechanical properties

Mechanical data

Open side panel	No

Protective circuit

Operating voltage range	60 V DC
Rated current	6.3 A
Surge protection fault message	none

Environmental and real-life conditions

Ambient conditions

Degree of protection	IP20
Ambient temperature (operation)	-40 °C ... 85 °C
Ambient temperature (storage/transport)	-40 °C ... 85 °C
Altitude	≤ 4000 m (amsl)

Standards and regulations

Standards/specifications	EN 60947-7-3
Note	2009

Mounting

Mounting type	Snapping and screwing components onto TERMITRAB complete

Drawings

Dimensional drawing

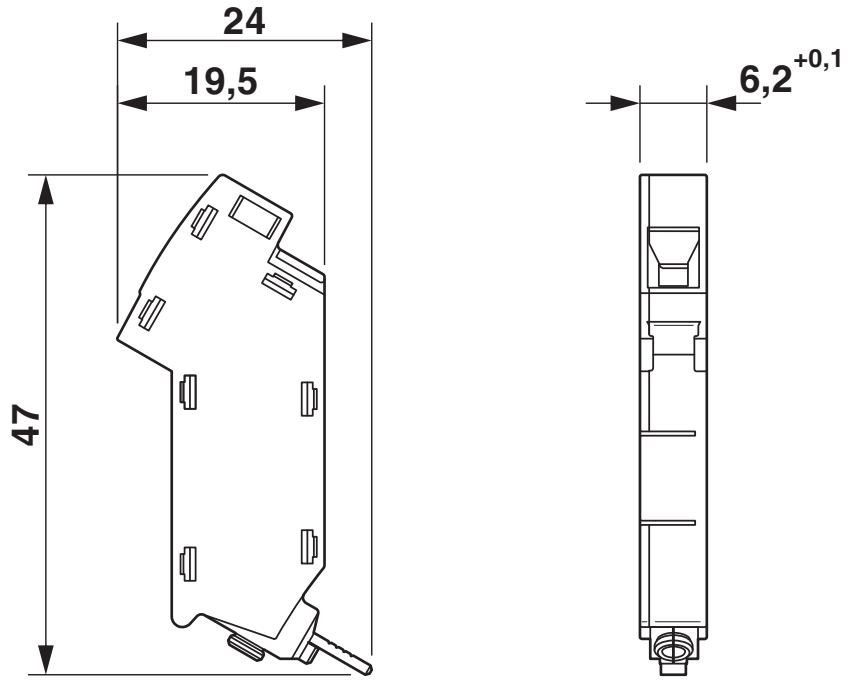

Approvals

To download certificates, visit the product detail page: https://www.phoenixcontact.com/us/products/1054762

UL Listed
Approval ID: FILE E 138168

DNV GL
Approval ID: TAE000027G

UL Listed
Approval ID: FILE E 333250

Classifications

ECLASS

ECLASS-11.0	27130890
ECLASS-13.0	27171501

ETIM

ETIM 9.0	EC001625

UNSPSC

UNSPSC 21.0	39121600

Environmental product compliance

EU RoHS

Fulfills EU RoHS substance requirements	Yes, No exemptions

China RoHS

Environment friendly use period (EFUP)	EFUP-E
	No hazardous substances above the limits

EU REACH SVHC

REACH candidate substance (CAS No.)	No substance above 0.1 wt%

Accessories

SZS 0,6X3,5 VDE - Screwdriver

1212602

https://www.phoenixcontact.com/us/products/1212602



Screwdriver, slot-headed, VDE insulated, size: 0.6 x 3.5 x 100 mm, 2-component grip, with non-slip grip

Phoenix Contact 2024 © - all rights reserved
https://www.phoenixcontact.com

Phoenix Contact USA
586 Fulling Mill Road
Middletown, PA 17057, United States
(+717) 944-1300
info@phoenixcon.com