MCR-SL-S-100-I-LP - Current measuring transducer

2813486

https://www.phoenixcontact.com/us/products/2813486

Please be informed that the data shown in this PDF document is generated from our online catalog. Please find the complete data in the user documentation. Our general terms of use for downloads are valid.



MCR current measuring transducer, for measuring sinusoidal and non-sinusoidal alternating currents, input current 0...100 A, loop-powered output with 4...20 mA

Your advantages

- Can be retrofitted with open-up Rogowski coil
- Loop-powered
- 30 ... 6000 Hz true r.m.s. value measurement
- Measuring range selection via slide switch

Commercial data

Item number	2813486
Packing unit	1 pc
Minimum order quantity	1 pc
Sales key	C444
Product key	CMMA23
GTIN	4046356043663
Weight per piece (including packing)	141.4 g
Weight per piece (excluding packing)	141.4 g
Customs tariff number	85437090
Country of origin	JP

Technical data

Product properties

Product type	Current measuring transducer

Insulation characteristics

Overvoltage category	III
Pollution degree	2

Electrical properties

Maximum power dissipation for nominal condition	1 W
Test voltage input/output	4.13 kV AC (50 Hz, 60 s)
Step response (10-90%)	< 340 ms
Maximum temperature coefficient	< 0.025 %/K
Maximum transmission error	< 1 % (of final value)
Rated insulation voltage	300 V AC (to earth)

Supply

Supply voltage range	loop-powered, no external supply necessary

Input data

Signal

Configurable/programmable	Yes
Current input signal	0 A ... 100 A

Measurement

Input current range	0 A AC ... 50 A AC
	0 A AC ... 75 A AC
	0 A AC ... 100 A AC
Setting range for min. input current	0 A AC ... 50 A AC
Setting range for max. input current	0 A AC ... 100 A AC
Overload capacity	Depending on laid conductor
Surge strength	Depending on through connected conductor
Frequency measuring range	30 Hz ... 6000 Hz
Curve type	Sinusoidal and non-sinusoidal
Operate threshold	1 % (of final value)

Output data

Signal: Current

Current output signal	4 mA ... 20 mA
Max. current output signal	< 25 mA
Load/output load current output	$(U_B$ - 12 V) x 350 / 12 A

Connection data

Connection method	Screw connection
Stripping length	8 mm
Screw thread	M3
Conductor cross-section rigid	0.2 mm² ... 2.5 mm²
Conductor cross-section flexible	0.2 mm² ... 2.5 mm²
Conductor cross-section AWG	24 ... 14
Tightening torque	0.5 Nm ... 0.6 Nm (4,4 ... 5,31 lbf-in.)
Connection method	Through connection

Dimensions

Item dimensions

Width	55 mm
Height	85 mm
Depth	70.5 mm

Circular conductor

Diameter	≤ 18.5 mm

Material specifications

Color	green (RAL 6021)
Housing material	Polyamide PA non-reinforced

Environmental and real-life conditions

Ambient conditions

Degree of protection	IP20
Ambient temperature (operation)	-20 °C ... 60 °C
Ambient temperature (storage/transport)	-40 °C ... 85 °C

Approvals

CE

Certificate	CE-compliant

UKCA

Certificate	UKCA-compliant

UL, USA/Canada

Identification	UL/C-UL Listed UL 508
	Class I, Div. 2, Groups A, B, C, D T4A
	Class I, Zone 2, Group IIC T4A
	Or Non-Hazardous Locations only

Mounting

Mounting type	DIN rail mounting
Mounting position	any

Drawings

Dimensional drawing

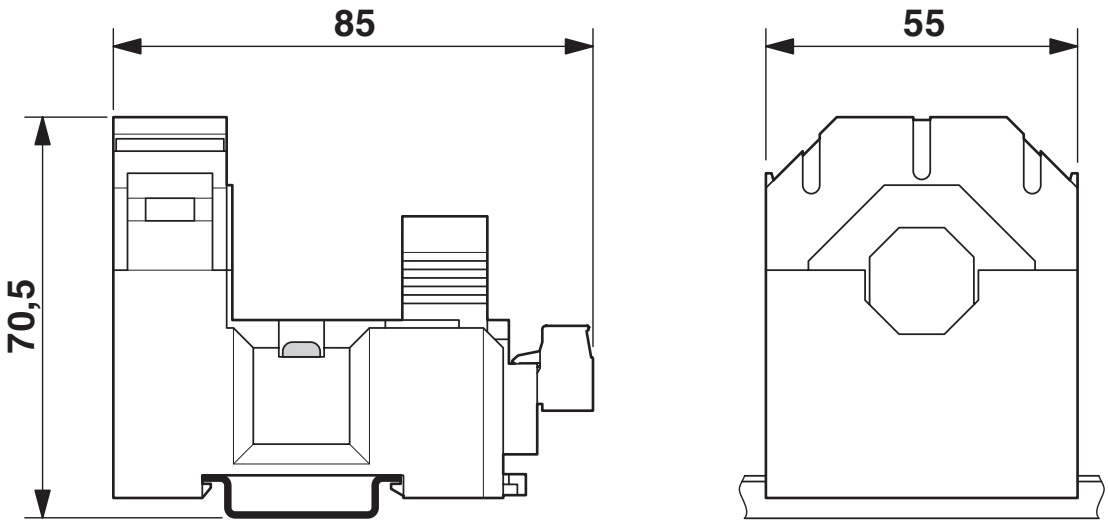

Application drawing

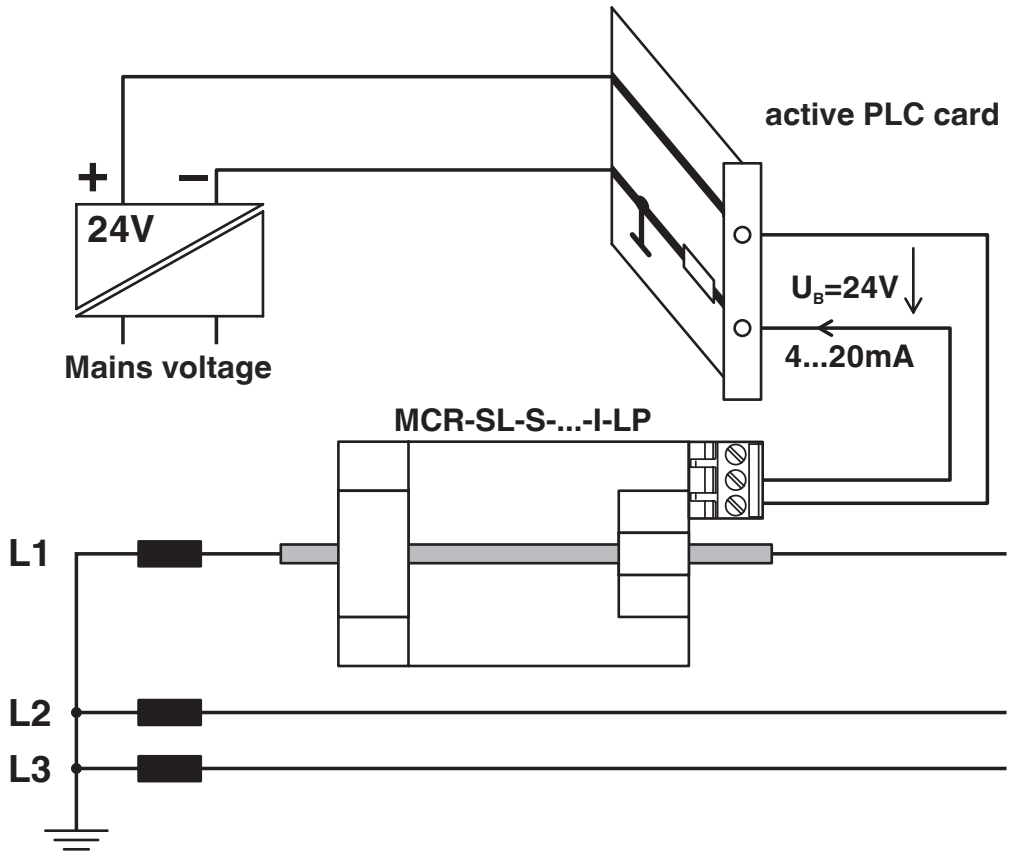

Current monitoring

Circuit diagram

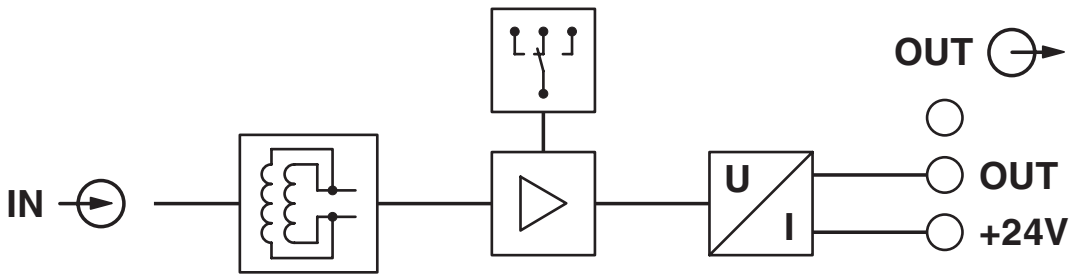

Approvals

To download certificates, visit the product detail page: https://www.phoenixcontact.com/us/products/2813486

EAC
Approval ID: RU*DE.*08.B.01852-19

UL Listed
Approval ID: E123528

cUL Listed
Approval ID: E123528

Classifications

ECLASS

ECLASS-13.0	27210123
ECLASS-15.0	27210123

ETIM

ETIM 9.0	EC002475

UNSPSC

UNSPSC 21.0	39121000

Environmental product compliance

EU RoHS

Fulfills EU RoHS substance requirements	Yes, No exemptions

China RoHS

Environment friendly use period (EFUP)	EFUP-25
	An article-related China RoHS declaration table can be found in the download area for the respective article under "Manufacturer declaration". For all articles with EFUP-E, no China RoHS declaration table issued and required.

EU REACH SVHC

REACH candidate substance (CAS No.)	No substance above 0.1 wt%

Phoenix Contact 2025 © - all rights reserved
https://www.phoenixcontact.com

Phoenix Contact USA
586 Fulling Mill Road
Middletown, PA 17057, United States
(+717) 944-1300
info@phoenixcon.com