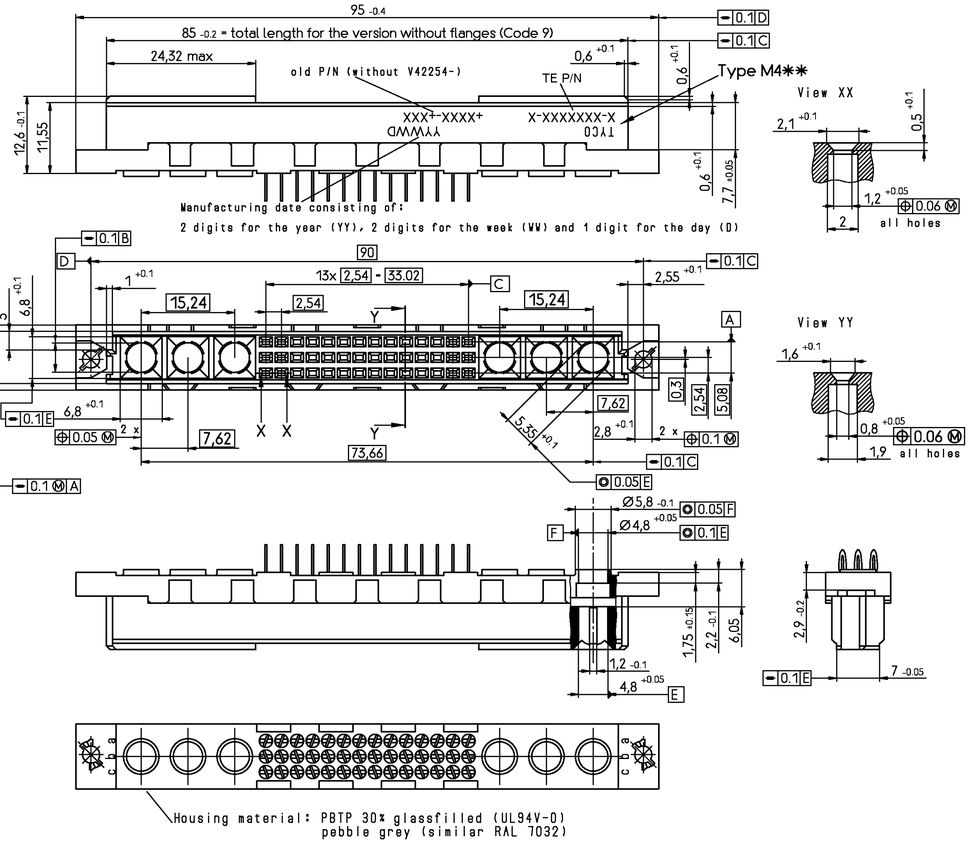

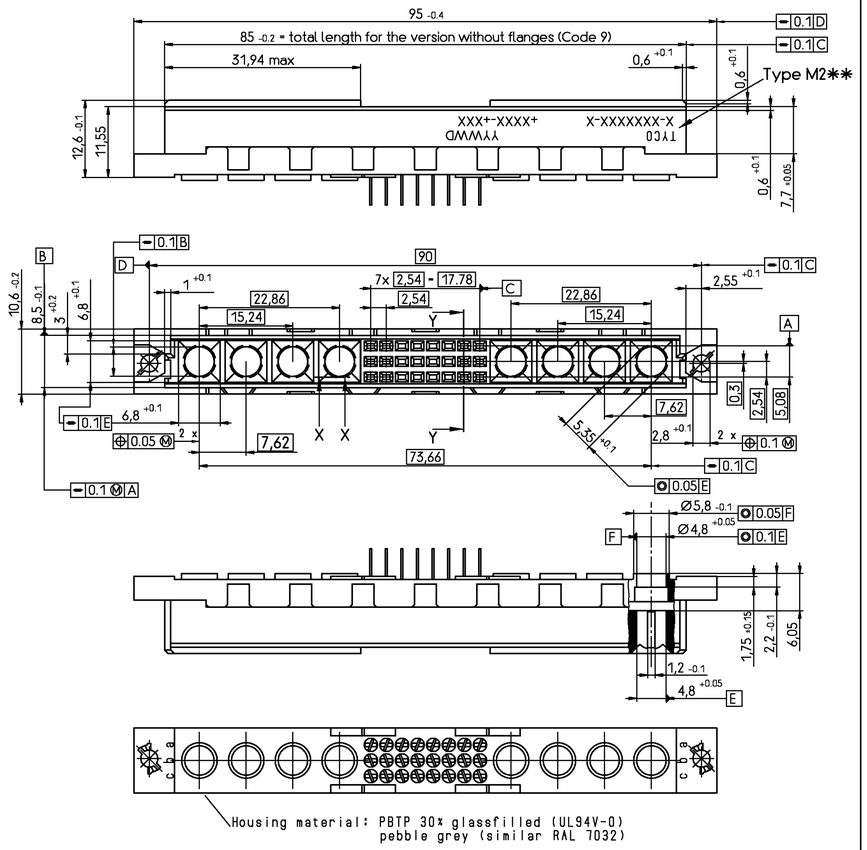

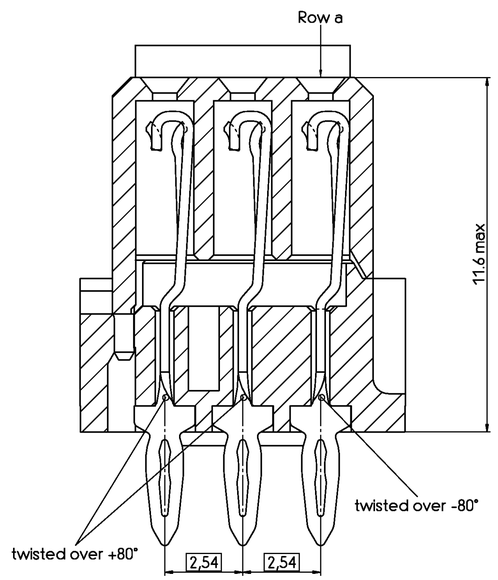

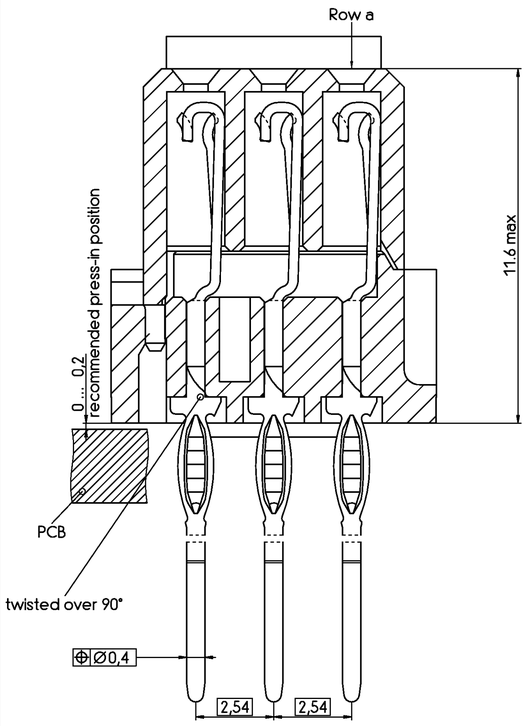

All female connectors can be pressed-in
with a flat stamp (over the connector housing)

Mounting holes in PCB:

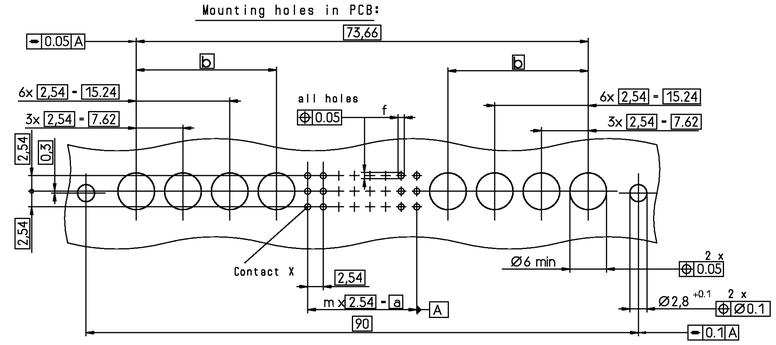

Type	Nr. of pos.	m	a	b	X
M+6SC	42 + max 6 SC	13	33.02	-	a10
M+8SC	24 + max 8 SC	7	17.78	9x2.54 = 22.86	a13

f	Termination
0.94+0.15	press fit

Contact : dimensions, plating and material

solder replacement / wire wrap and pressfit

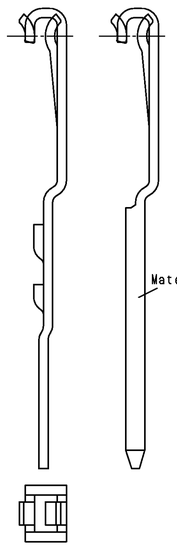

V42254-P2***-M6**

Performance level acc to DIN41612 and IEC 603-2	Noble metals	Code
Class I	PdNi + Au or Au	1
	Au	4
Class II	PdNi + Au or Au	2
	Au	5
Class III	PdNi + Au or Au	3

Nickel underlayer
Protection film : HF-grease

Termination Styles

Pressfit (acc. to IEC 352-5)

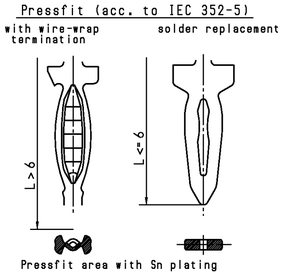

pressfit with rear plug up

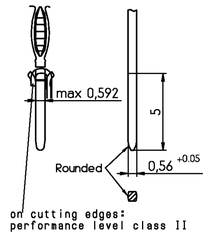

V24254-P2***-M***

		L	Code
	Pressfit	3.7 ±0.3	63
		6.0 ±0.3	70
	Pressfit-ww. wire-wrap	13 +0.5	60
		17 +0.5	61
	Pressfit-ww. insertion area	13 +0.5	66
		17 +0.5	67
		20 +0.5	68

V 4 2 2 5 4 - P 2 * * * - M * * *

Code 2 = Basic version
Code 9 = version without flanges

Code for performance level

Code for termination style

Style, no of contacts and contact assignment see page 2

THIS INFORMATION IS CONFIDENTIAL AND PROPRIETARY TO TYCO ELECTRONICS CORPORATION AND ITS WORLDWIDE SUBSIDIARIES AND AFFILIATES. IT MAY NOT BE DISCLOSED TO ANYONE, OTHER THAN TYCO ELECTRONICS CORORATION, WITHOUT WRITTEN AUTHORIZATION FROM TYCO ELECTRONICS CORPORATION, HARRISBURG, PENNSYLVANIA USA.

Tyco Electronics
TYCO ELECTRONICS CORPORATION
OOSTKAMP - BELGIUM
DIMENSIONS IN MM

SCALE | WEIGHT
MATERIAL

DATE 22.06.01
NAME Colpaert
DEP. PE COM

PART NAME
Receptacle Assembly Eurocard
Press fit Type M with 6 and 8
Special Contacts

REV.	CHANGE ORDER	DATE	APP.
A2	ECR-10-003044	02JUN10	MKO
A1	SR10-0177-03	11 AUG 03	KV
A	SR10-0275-01	22.06.01	BC

TOLERANCE UNLESS SPECIFIED OTHERWISE

PART NO. V42254-P2***-M4**-*-7626
SHT. 1+
Customer Drawing Nr. C 5-1593637-4
OF 2

Old Part Number	TE Part Number	Style & Number of Positions	Termination posts	Loaded Rows	Performance Level	Board Locks	
V42254-P2263-M240	~~5-1393637-4~~	M24+8	3.7mm Press-in terminals	every row , every pitch	2	No	OBSOLETE
V42254-P2263-M420	5-1393637-7	M42+6	3.7mm Press-in terminals	every row , every pitch	2	No	

Active part numbers.
Contact Tyco Electronics for other configuration availability

Tyco Electronics

TYCO ELECTRONICS CORPORATION
OOSTKAMP - BELGIUM

LOC GW

DIMENSIONS IN MM

SCALE | WEIGHT

MATERIAL

DATE	22.06.01
NAME	Colpaert
DEP.	PE COM

PART NAME
Receptacle Assembly Eurocard
Press fit Type M with 6 and 8
Special Contacts

TOLERANCE UNLESS SPECIFIED OTHERWISE

PART NO. V42254-P2***-M4**-*-7626

SHT. 2-

OF 2

REV.	CHANGE ORDER	DATE	APP.
A2	SEE SHEET 1		

Customer Drawing Nr. C 5-1393637-4

PROPRIETARY:
THIS INFORMATION IS CONFIDENTIAL AND PROPRIETARY TO TYCO ELECTRONICS CORPORATION AND ITS WORLDWIDE SUBSIDIARIES AND AFFILIATES. IT MAY NOT BE DISCLOSED TO ANYONE, OTHER THAN TYCO ELECTRONICS PERSONNEL, WITHOUT WRITTEN AUTHORIZATION FROM TYCO ELECTRONICS CORPORATION, HARRISBURG PENNSYLVANIA USA