Data sheet

MRA-F080-402D2

Wire draw mechanism for wire draw encoders

WIRE DRAW MECHANISM

SICK
Sensor Intelligence.

Ordering information

Type	part no.
MRA-F080-402D2	6029788

Other models and accessories ➜ www.sick.com/Wire_draw_mechanism_for_wire_draw_encoders

Detailed technical data

Features

Description	HighLine wire draw mechanism for face mount flange with 10 mm shaft, measuring range 0 m ... 2 m
Items supplied	Without encoder
Measurement range	0 m 2 m
Reproducibility	≤ 1 mm
Linearity	≤ ± 2 mm
Hysteresis	≤ 2 mm
Weight	1.6 kg Wire draw mechanism
Weight (measuring wire)	7.1 g/m
Measuring wire material	Highly flexible stranded steel 1,4401 stainless steel V4A
Material, spring housing	Die-cast zinc
Housing material, wire draw mechanism	Aluminum (anodized), aluminum die cast (nickel-plated)
Length of wire pulled out per revolution	200 mm
Actual wire draw length	2.2 m
Spring return force	≤ 6 N 14 N [1]
Measuring wire diameter	1.35 mm
Wire acceleration	40 m/s²
Operating speed	8 m/s
Resolution	To calculate the resolution of the system please use following formula:length of wire draw per revolution / steps per revolution = resolution of the combination of wire draw + encoder
Ambient operating temperature	–30 °C +70 °C
Enclosure rating mechanic	IP64
Life of wire draw mechanism	Typ. 1,000,000 cycles [2] [3]

[1] These values were measred at an ambient temperature of 25 °C. There may be variations at other temperatures.
[2] Average values, which depend on the application.
[3] The service life depends on the type of load. This is influenced by environmental conditions, the installation location, the measuring range in use, the traversing speed, and acceleration.

Certificates

China-RoHS	✓

Classifications

ECLASS 5.0	27270591
ECLASS 5.1.4	27270591

ECLASS 6.0	27279103
ECLASS 6.2	27279103
ECLASS 7.0	27279103
ECLASS 8.0	27279103
ECLASS 8.1	27279103
ECLASS 9.0	27270591
ECLASS 10.0	27270591
ECLASS 11.0	27270591
ECLASS 12.0	27270591
ETIM 5.0	EC002026
ETIM 6.0	EC002026
ETIM 7.0	EC002026
ETIM 8.0	EC002026
UNSPSC 16.0901	39122221

Dimensional drawing

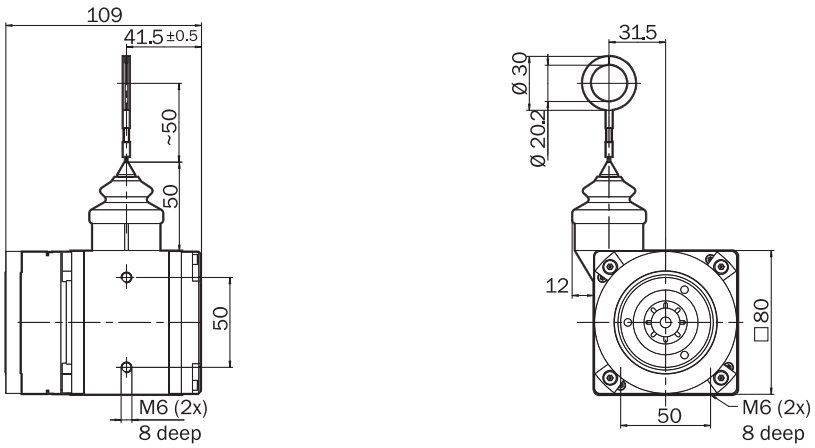

Dimensions in mm (inch)

Recommended accessories

Other models and accessories ➜ www.sick.com/Wire_draw_mechanism_for_wire_draw_encoders

	Brief description	Type	part no.
Mounting systems			
	• **Description:** Compressed air attachment for MRA-F080... and MRA-F130... HighLine wire draw mechanism	MRA-F-P	6073769
	• **Description:** Additional brush attachment for wire draw mechanism MRA-F080 (2 m and 3 m from HighLine series)	MRA-F080-B	6045341
	• **Description:** Wire draw deflection pulley for wire draw mechanism MRA-F080 (2m and 3m from HighLine series)	MRA-F080-R	6028632
	• **Description:** Spare mounting set for HighLine wire draw mechanisms for fitting encoders with face mount flange	MRA-F-L	6030124

SICK AT A GLANCE

SICK is one of the leading manufacturers of intelligent sensors and sensor solutions for industrial applications. A unique range of products and services creates the perfect basis for controlling processes securely and efficiently, protecting individuals from accidents and preventing damage to the environment.

We have extensive experience in a wide range of industries and understand their processes and requirements. With intelligent sensors, we can deliver exactly what our customers need. In application centers in Europe, Asia and North America, system solutions are tested and optimized in accordance with customer specifications. All this makes us a reliable supplier and development partner.

Comprehensive services complete our offering: SICK LifeTime Services provide support throughout the machine life cycle and ensure safety and productivity.

For us, that is “Sensor Intelligence.”

WORLDWIDE PRESENCE:

Contacts and other locations –www.sick.com