RAD-AI4-U-IFS - I/O extension module

2702290

https://www.phoenixcontact.com/us/products/2702290

Please be informed that the data shown in this PDF document is generated from our online catalog. Please find the complete data in the user documentation. Our general terms of use for downloads are valid.



Radioline - I/O extension module, 4 analog voltage inputs (0 ... 5 V, 0 ... 10 V)

Your advantages

- Easy module replacement even during operation (hot swap)
- Extended temperature range of -40 °C … +70 °C
- Channel-to-channel electrical isolation
- Easy startup via thumbwheel

Commercial data

Item number	2702290
Packing unit	1 pc
Minimum order quantity	1 pc
Sales key	DN26
Product key	DNC61D
Catalog page	Page 502 (C-8-2015)
GTIN	4055626076218
Weight per piece (including packing)	196.9 g
Weight per piece (excluding packing)	200 g
Customs tariff number	85177900
Country of origin	US

Set consists of

ME 17,5 TBUS 1,5/ 5-ST-3,81 GN - DIN rail bus connectors

2709561

https://www.phoenixcontact.com/us/products/2709561

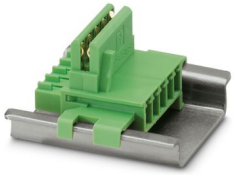

DIN rail connector for DIN rail mounting. Universal for TBUS housing. Gold-plated contacts, 5-pos.

Technical data

Notes

Utilization restriction

EMC note	EMC: class A product, see manufacturer's declaration in the download area

Product properties

Product type	Extension module
MTTF	887 Years (Telcordia standard, 25°C temperature, 21% operating cycle (5 days a week, 8 hours a day))
	357 Years (Telcordia standard, 40°C temperature, 34.25% operating cycle (5 days a week, 12 hours a day))
	65 Years (Telcordia standard, temperature 40 °C, operating cycle 100 % (7 days a week, 24 hours a day))

Insulation characteristics

Overvoltage category	II
Degree of pollution	2

Electrical properties

Electrical isolation	50 V (Rated insulation voltage (in each case between the analog inputs / TBUS supply, reinforced insulation in accordance with EN 61010))
	300 V (Rated insulation voltage (to adjacent devices, basic insulation in accordance with EN/IEC 61010))
Test voltage	1.5 kV AC (50 Hz, 1 min.)
Maximum power dissipation for nominal condition	2.88 W
Transient surge protection	Yes

Supply

Supply voltage range	19.2 V DC ... 30.5 V DC (DIN rail connector)
Max. current consumption	≤ 120 mA (At 24 V DC, at 25°C)

Input data

Analog

Description of the input	Voltage input
Number of inputs	4
Voltage input signal	0 V ... 5 V (can be set via DIP switches)
	0 V ... 10 V (can be set via DIP switches)
Resolution	16 bit (Bit)
Precision	≤ 0.1 % (at 25 °C)
Supply voltage	≥ 12 V DC (30 mA maximum current draw)

Connection data

Connection method	Screw connection

Stripping length	7 mm
Conductor cross section, rigid min.	0.2 mm²
Conductor cross section, rigid max.	2.5 mm²
Conductor cross section flexible min.	0.2 mm²
Conductor cross section flexible max.	2.5 mm²
Conductor cross section AWG min.	24
Conductor cross section AWG max.	14

Signaling

Status display	Green LED (supply voltage, PWR)
	Green LED (bus communication, DAT)
	Red LED (periphery error, ERR)

Dimensions

Dimensional drawing	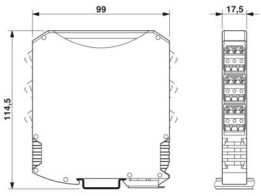
Width	17.5 mm
Height	113 mm
Depth	114.5 mm

Material specifications

Color	green
Flammability rating according to UL 94	V0
Housing material	PA 6.6-FR

Environmental and real-life conditions

Ambient conditions

Degree of protection	IP20
Ambient temperature (operation)	-40 °C ... 70 °C (>55°C derating)
	-40 °F ... 158 °F (>131°F derating)
Ambient temperature (storage/transport)	-40 °C ... 85 °C
	-40 °F ... 185 °F
Altitude	2000 m
Permissible humidity (operation)	20 % ... 85 %
Permissible humidity (storage/transport)	20 % ... 85 %
Shock	16g, 11 ms
Vibration (operation)	in accordance with IEC 60068-2-6: 5g, 10 Hz ... 150 Hz

Approvals

Conformity/Approvals

Conformance	CE-compliant
ATEX	Ⓔx II 3 G Ex ec IIC T4 Gc IBExU 18ATEXB018X
IECEx	IECEx IBE 13.0019X
UL, USA / Canada	Class I, Div. 2, Groups A, B, C, D T4 Class I, Zone 2, IIC T4

Standards and regulations

Standard designation	EMC Directive 2014/30/EU
Standards/specifications	EN 61000-6-2
Standard designation	EMC Directive 2014/30/EU
Standards/specifications	EN 61000-6-4
Standard designation	Ex Directive (ATEX)
Standards/specifications	EN 60079-0
Standard designation	Ex Directive (ATEX)
Standards/specifications	EN 60079-15

Mounting

Mounting type	DIN rail: 35 mm
Assembly note	on standard DIN rail NS 35 in accordance with EN 60715
Mounting position	any

Drawings

Dimensional drawing

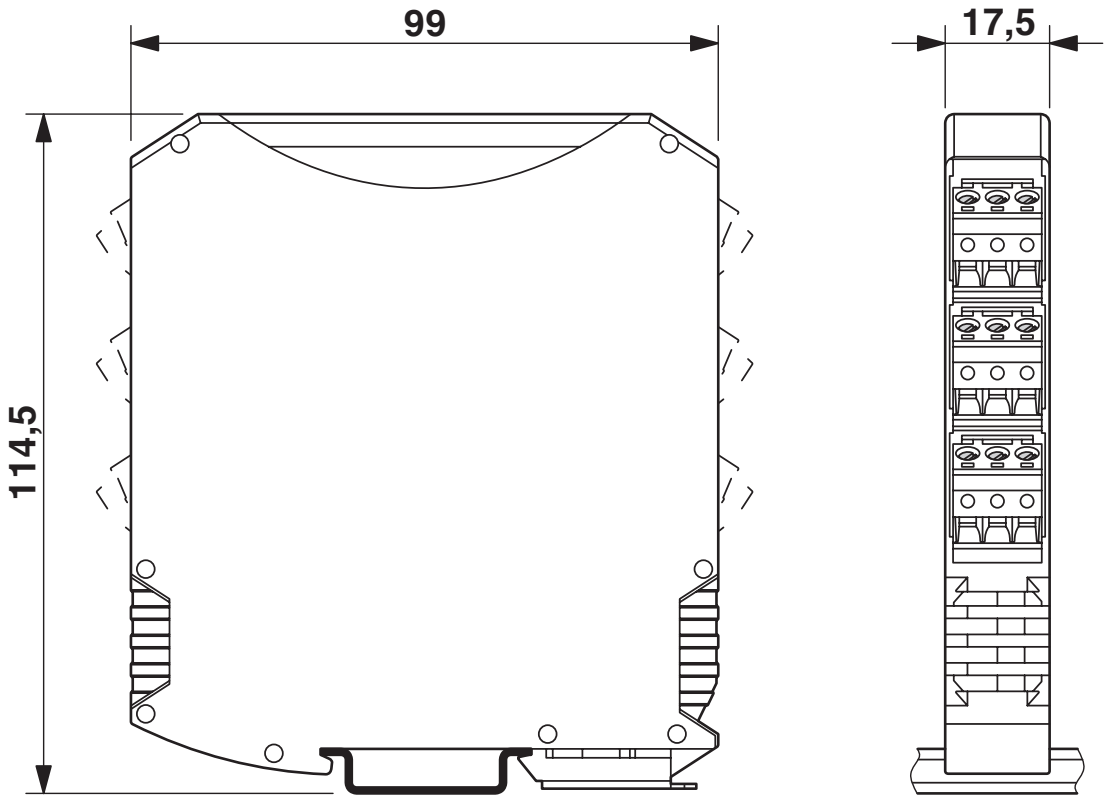

Slim design

Circuit diagram

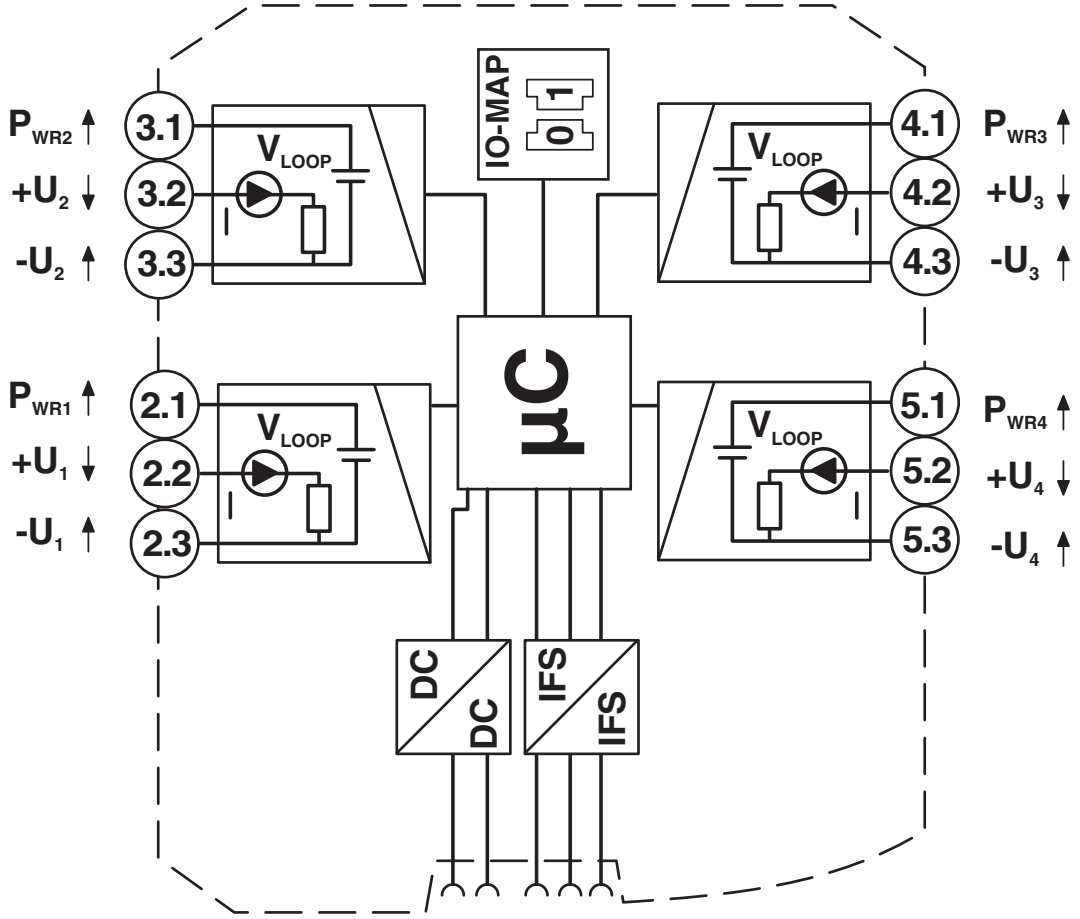

Approvals

To download certificates, visit the product detail page: https://www.phoenixcontact.com/us/products/2702290

UL Listed
Approval ID: FILE E 238705

cUL Listed
Approval ID: FILE E 238705

cUL Listed
Approval ID: FILE E 196811

UL Listed
Approval ID: FILE E 196811

cULus Listed

cULus Listed

Classifications

ECLASS

ECLASS-11.0	27242601
ECLASS-12.0	27242601
ECLASS-13.0	27242601

ETIM

ETIM 9.0	EC001596

UNSPSC

UNSPSC 21.0	32151600

Environmental product compliance

EU RoHS

Fulfills EU RoHS substance requirements	Yes
Exemption	7(a), 7(c)-I

EU REACH SVHC

REACH candidate substance (CAS No.)	Lead(CAS: 7439-92-1)
SCIP	79373e14-1184-4179-bb37-75904848c584

Mandatory accessories

RAD-2400-IFS - Wireless module

2901541

https://www.phoenixcontact.com/us/products/2901541



Radioline - 2.4 GHz wireless transceiver with RS-232/RS-485 interface, can be extended with I/O modules, RSMA (female) antenna connection, point-to-point, star, and mesh networks up to 250 stations, range of up to 5 km (with a clear line of sight), for worldwide use

RAD-900-IFS - Wireless module

2901540

https://www.phoenixcontact.com/us/products/2901540



Radioline - 900 MHz wireless transceiver with RS-232/485 interface, can be extended with I/O modules, RSMA (female) antenna connection, point-to-point, star, and mesh networks up to 250 stations, range of up to 32 km (line of sight), use in North America

RAD-RS485-IFS - Communication module

2702184

https://www.phoenixcontact.com/us/products/2702184



Radioline - RS-485 multipoint multiplexer, can be extended with I/O modules, can be used as Modbus/RTU bus coupler or can be combined with Radioline wireless system, up to 99 stations, range of up to 1.2 km on in-house copper cables

RAD-2400-IFS-JP - Wireless module

2702863

https://www.phoenixcontact.com/us/products/2702863



Radioline - 2.4 GHz wireless transceiver with RS-232/RS-485 interface, can be extended with I/O modules, RSMA (female) antenna connection, point-to-point, star, and mesh networks up to 250 stations, range of up to 5 km (with a clear line of sight), for use in Japan

RAD-900-IFS-AU - Wireless module

2702878

https://www.phoenixcontact.com/us/products/2702878



Radioline - 900 MHz wireless transceiver with RS-232/485 interface, can be extended with I/O modules, RSMA (female) antenna connection, point-to-point, star, and mesh networks up to 250 stations, range of up to 32 km (line of sight), for use in Australia.

Accessories

ME 17,5 TBUS 1,5/ 5-ST-3,81 GN - DIN rail bus connectors

2709561

https://www.phoenixcontact.com/us/products/2709561

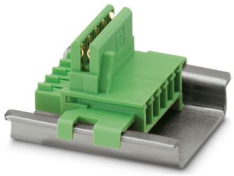

DIN rail connector for DIN rail mounting. Universal for TBUS housing. Gold-plated contacts, 5-pos.

RAD-AO4-IFS - I/O extension module

2901538

https://www.phoenixcontact.com/us/products/2901538



Radioline - I/O extension module, 4 analog current or voltage outputs (0/4 mA ... 20 mA, 0 V ... 10 V)

RAD-AO4-IFS - I/O extension module

2901538

https://www.phoenixcontact.com/us/products/2901538



Radioline - I/O extension module, 4 analog current or voltage outputs (0/4 mA ... 20 mA, 0 V ... 10 V)

Phoenix Contact 2024 © - all rights reserved
https://www.phoenixcontact.com

Phoenix Contact USA
586 Fulling Mill Road
Middletown, PA 17057, United States
(+717) 944-1300
info@phoenixcon.com