172063-3 ✔ ACTIVE

Standard Drawer

TE Internal #: 172063-3

8 Position, Plug, Housing, Crimp, Wire-to-Board / Wire-to-Wire, UL 94V-0, 5 mm [.197 in] Centerline, 2 Row, Wire & Cable, Standard Drawer

View on TE.com >

Connectors > Rectangular Connectors > Standard Rectangular Connectors > Standard Drawer Plug Housings



Connector Product Type: **Housing**

Connector & Housing Type: **Plug**

Connector System: **Wire-to-Board, Wire-to-Wire**

UL Flammability Rating: **UL 94V-0**

Number of Positions: **8**

All Standard Drawer Plug Housings (15)

Features

Product Type Features

Connector Product Type	Housing
Connector & Housing Type	Plug
Connector System	Wire-to-Board, Wire-to-Wire
Sealable	No
Connector & Contact Terminates To	Wire & Cable

Configuration Features

Number of Positions	8
Number of Rows	2
Number of Signal Positions	4

Body Features

Primary Product Color	Blue

Contact Features

Contact Base Material	Phosphor Bronze
Contact Type	Pin
Contact Current Rating (Max)	15 A

Termination Features

Termination Method to Wire & Cable	Crimp

Mechanical Attachment

Panel Mount Feature	With
Mating Retention	With
Connector Mounting Type	Panel Mount

Housing Features

Centerline (Pitch)	5 mm[.197 in]
Housing Material	PBT GF

Dimensions

Connector Width	32.5 mm
Connector Height	26.3 mm[1.035 in]
Connector Length	51.2 mm[2.02 in]
Row-to-Row Spacing	13.3 mm[.524 in]
Wire Size	.22 – 2.18 mm^2, .22 mm^2

Usage Conditions

Operating Temperature Range	-20 – 120 °C[-4 – 248 °F]

Operation/Application

Circuit Application	Power & Signal

Industry Standards

UL Flammability Rating	UL 94V-0

Packaging Features

Packaging Method	Box & Carton

Product Compliance

For compliance documentation, visit the product page on TE.com>

EU RoHS Directive 2011/65/EU	Compliant
EU ELV Directive 2000/53/EC	Compliant
China RoHS 2 Directive MIIT Order No 32, 2016	No Restricted Materials Above Threshold
EU REACH Regulation (EC) No. 1907/2006	Current ECHA Candidate List: JUNE 2025 (250) Candidate List Declared Against: JUNE 2025 (250) Does not contain REACH SVHC

Halogen Content	Not Low Halogen - contains Br or Cl > 900 ppm.
Solder Process Capability	Not applicable for solder process capability

Product Compliance Disclaimer

This information is provided based on reasonable inquiry of our suppliers and represents our current actual knowledge based on the information they provided. This information is subject to change. The part numbers that TE has identified as EU RoHS compliant have a maximum concentration of 0.1% by weight in homogenous materials for lead, hexavalent chromium, mercury, PBB, PBDE, DBP, BBP, DEHP, DIBP, and 0.01% for cadmium, or qualify for an exemption to these limits as defined in the Annexes of Directive 2011/65/EU (RoHS2). Finished electrical and electronic equipment products will be CE marked as required by Directive 2011/65/EU. Components may not be CE marked. Additionally, the part numbers that TE has identified as EU ELV compliant have a maximum concentration of 0.1% by weight in homogenous materials for lead, hexavalent chromium, and mercury, and 0.01% for cadmium, or qualify for an exemption to these limits as defined in the Annexes of Directive 2000/53/EC (ELV). Regarding the REACH Regulation, the information TE provides on SVHC in articles for this part number is based on the latest European Chemicals Agency (ECHA) 'Guidance on requirements for substances in articles' posted at this URL: https://echa.europa.eu/guidance-documents/guidance-on-reach

Compatible Parts



TE Part # 172653-2
DRAWER CONNECTOR MALE ASSY 8 P



TE Part # 5172070-3
DRAWER CONN. FEMALE HSG ASSY 8



TE Part # 170311-1
CONTACT FOR DRAWER CONN



TE Part # 170314-1
DRAWER CONN.CONTACT



TE Part # 170313-1
DRAWER CONN.CONTACT



TE Part # 170484-1
CONTACT FOR DRAWER CONNECTOR

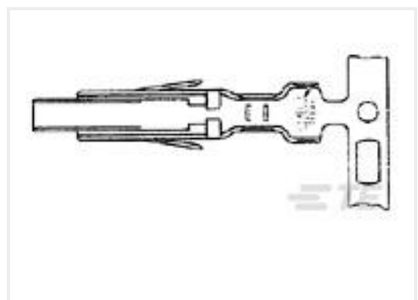

TE Part # 170312-1
POWER CONN.CONTACT



TE Part # 170485-1
DRAWER CONN LP

Also in the Series | Standard Drawer

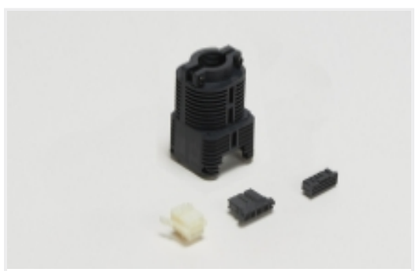

Rectangular Connector Housings(16)



Rectangular Power Connectors(18)

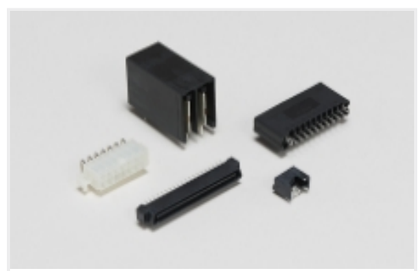

Standard Rectangular Connectors(20)



Wire-to-Board Connector Assemblies & Housings(17)

Customers Also Bought



TE Part #2-173985-8
AMP CT MT AMP-IN HDR-V BLU 8P



TE Part #4-179228-2
CT CRIMP-2 REC HSG 2P YELLOW



TE Part #4-292156-3
CT RELAY HDR ASSY FREE HANGING

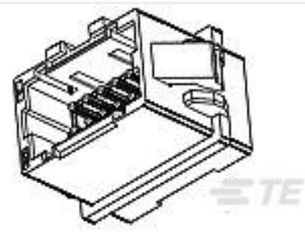

TE Part #3-292216-2
MINI CT D/R RELAY 32P V NAT



TE Part #2-292254-4
CT RELAY HDR ASSY 4P BLUE



TE Part #4-292254-2
CT RELAY HDR ASSY 2P YELLOW

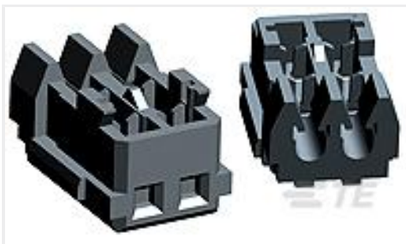

TE Part #1-353293-9
MINI CT MT REC ASSY 19P GRAY



TE Part #1-2355088-4
MICRO CT CONN MT REC ASSEMBLY 14P



TE Part #1-2355088-5
MICRO CT CONN MT REC ASSEMBLY 15P

TE Part #9-292112-5
MT REC ASSY (#26,28)

Documents

Product Drawings

DRAWER CONN 8P MALE

Japanese

CAD Files

3D PDF

3D

Customer View Model

ENG_CVM_CVM_172063-3_G.2d_dxf.zip

English

Customer View Model

ENG_CVM_CVM_172063-3_G.3d_igs.zip

English

Customer View Model

ENG_CVM_CVM_172063-3_G.3d_stp.zip

English

By downloading the CAD file I accept and agree to the Terms and Conditions of use.

Datasheets & Catalog Pages

POWER_CONNECTORS_CATALOG_SEC02_CABLE_MOUNTED

English

Low Power Drawer Connectors QRG

English

Product Specifications

Crimping Drawer Connector Contacts

English

Application Specification

English

Terminating AMP MTEI Connector

English

Application Specification

English

Agency Approvals

UL

English