FOC-ST:A-SJ:C-HB02/10 PR - FO patch cable

1423846

https://www.phoenixcontact.com/us/products/1423846

Please be informed that the data shown in this PDF document is generated from our online catalog. Please find the complete data in the user documentation. Our general terms of use for downloads are valid.



Assembled FO cable, PROFINET cable type B, 200/230 µm PCF fiber, SC-RJ/IP67 push-pull metal housing to BFOC(ST)/IP20, PVC outer sheath, halogen-free, ozone and UV-resistant, in conduit, for fixed indoor installation, length: 10 m

Your advantages

- Reliable even in EMC-sensitive applications
- Fast data transmission for demanding applications
- Flexible installation, thanks to PVC outer sheath
- Including individual test report
- Universal installation cables for fixed installation indoors and outdoors (direct underground installation not permitted)
- Additional line protection thanks to protective tube
- 2.2 mm single-core wires made from extremely hard-wearing polyvinyl chloride (PVC)
- PROFINET type B for flexible use
- Robust cable for use in harsh environments

Commercial data

Item number	1423846
Packing unit	1 pc
Minimum order quantity	1 pc
Sales key	AB17
Product key	ABNOBB
Catalog page	Page 217 (C-4-2019)
GTIN	4055626364209
Weight per piece (including packing)	1,035 g
Weight per piece (excluding packing)	951 g
Customs tariff number	85447000
Country of origin	CZ

Technical data

Product properties

Product type	Data cable preassembled
Application	Standard
Number of positions	2

Electrical properties

Attenuation	≤ 2 dB (at 650 nm)
	≤ 1.5 dB (with 850 nm)
Transmission medium	PCF fiber
Transmission speed	100 Mbps

Mechanical properties

Tensile strength short-term/long-term	800 N / 100 N

Material specifications

Ferrule material	Zirconia ceramics
Outer sheath, material	PVC

Dimensions

External dimensions

External diameter min.	6.7 mm
External diameter max.	7.7 mm

Mechanical characteristics

Ferrule diameter	2.50 mm

Connector

Connection 1

Type	Plug straight Push-pull version 14
Degree of protection	IP65/IP67 (Push-pull)
	IP20 (B-FOC)

Connection 2

Type	Plug straight B-FOC (ST)
Degree of protection	IP20

Cable/line

Cable length	10.00 m
Cable weight	45 kg/km
Short symbol	AT-V(ZN)YY 2K200/230 HCS
External cable diameter	7.2 mm
Outer sheath, material	PVC

External sheath, strain relief elements	Non-metallic, aramide fiber
Single wire, number of litz wires	2
Single wire, material	PVC
Individual wire diameter	2.2 mm ±0.1 mm
Tensile strength short-term/long-term	800 N / 100 N
Lateral pressure short term	500 N/cm
Lateral pressure, long-term	300 N/cm
Bending radius, single element	30 mm (Short-term)
	30 mm (Short-term)
Bending radius, entire cable	70 mm (Short-term)
	70 mm (Short-term)
660 nm	10 dB/km
850 nm	8 dB/km
Resistance to oil	very good oil and chemical resistance
Behavior in fire	Flame-resistant as per IEEE and IEC 60 332-3 test type C

FO cable

Number of fibers	2
Fiber	200/230 µm
Fiber type	PCF fiber A3C
Cable, attenuation	10 dB/km (650 nm), 8 dB/km (at 850 nm)
Transmission medium	PCF fiber

Environmental and real-life conditions

Ambient conditions

Degree of protection	IP67/IP20
Ambient temperature (operation)	-40 °C ... 70 °C
Ambient temperature (storage/transport)	-40 °C ... 70 °C
Ambient temperature (assembly)	-5 °C ... 50 °C
Ambient temperature (installation)	-5 °C ... 50 °C
Resistance to oil	yes

Standards and regulations

Flame resistance	yes
Resistance to oil	yes

Drawings

Dimensional drawing

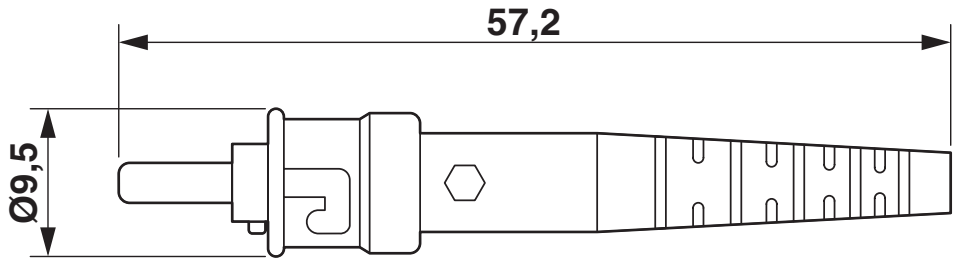

ST simplex connector, IP20

Dimensional drawing

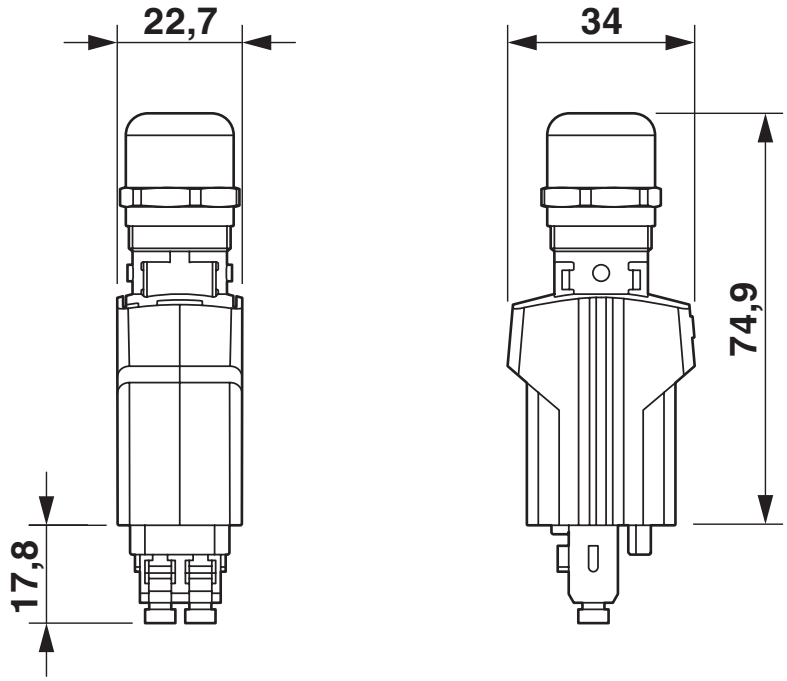

Push-Pull SC-RJ connector IP65/67

Classifications

ECLASS

ECLASS-11.0	27440390
ECLASS-13.0	27061003
ECLASS-12.0	27440390

ETIM

ETIM 8.0	EC001121

UNSPSC

UNSPSC 21.0	39121400

Environmental product compliance

EU RoHS

Fulfills EU RoHS substance requirements	Yes, No exemptions

China RoHS

Environment friendly use period (EFUP)	EFUP-E
	No hazardous substances above the limits

EU REACH SVHC

REACH candidate substance (CAS No.)	6,6'-di-tert-butyl-2,2'-methylenedi-p-cresol(CAS: 119-47-1)
SCIP	114d778a-fc5b-44b1-b67d-6e3dcc5aaefa

Mandatory accessories

FOC-ADAPTER:ST/ST-MM - Fiber optic coupling

1208099

https://www.phoenixcontact.com/us/products/1208099



Fiber optic coupling, degree of protection: IP20, number of positions: 1, material: Metal, connection method: Coupling, cable outlet: straight, color: silver/matt, Ethernet

Accessories

FOC-TOOL-FERRULECLEANER-2.50 - FO accessories

1407029

https://www.phoenixcontact.com/us/products/1407029

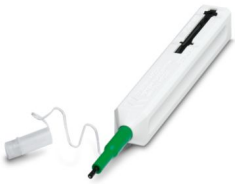

2.50 mm ferrule cleaner, for ST, SC, FC, E2000 (also APC), approx. 500 cleaning cycles

PSM-SET-BFOC-LINK/2 - Fiber optic coupling

2799429

https://www.phoenixcontact.com/us/products/2799429

Coupling; set consisting of 2 couplings for connecting B-FOC plugs



VS-PPC-J-1-SCRJ-MNBK - Fiber optic coupling

1405206

https://www.phoenixcontact.com/us/products/1405206

SC-RJ push-pull coupling, IP65, metal, with protective cover, color: nickel-plated



Phoenix Contact 2024 © - all rights reserved
https://www.phoenixcontact.com

Phoenix Contact USA
586 Fulling Mill Road
Middletown, PA 17057, United States
(+717) 944-1300
info@phoenixcon.com