NBC-P12MSD/ 0,3-93E/P12FSD - Network cable

1224258

https://www.phoenixcontact.com/us/products/1224258

Please be informed that the data shown in this PDF document is generated from our online catalog. Please find the complete data in the user documentation. Our general terms of use for downloads are valid.



Network cable, Ethernet CAT5 (100 Mbps), 4-position, PUR halogen-free, water blue RAL 5021, shielded (Aluminum-coated foil, tinned copper braided shield), Advanced Shielding Technology, Plug straight M12 Push Pull, coding: D / IP67, on Socket straight M12 Push Pull, coding: D / IP67, cable length: 0.3 m

Commercial data

Item number	1224258
Packing unit	1 pc
Minimum order quantity	1 pc
Sales key	BF04
Product key	BF1CJJ
GTIN	4063151315191
Weight per piece (including packing)	50.84 g
Weight per piece (excluding packing)	22.22 g
Customs tariff number	85444290
Country of origin	PL

Technical data

Product properties

Product type	Data cable preassembled
Application	Standard
Sensor type	Ethernet
Number of positions	4
Shielded	yes

Interfaces

Bus system	Ethernet
Signal type/category	Ethernet CAT5 (IEC 11801), 100 Mbps

Signaling

Status display	No
Status display present	No

Electrical properties

Nominal voltage U_N	48 V AC
	60 V DC
Nominal current I_N	1.5 A
Transmission medium	Copper
Transmission characteristics (category)	CAT5 (IEC 11801:2002)

Connector

Connection 1

Type	Plug straight M12 Push Pull / IP67
Number of positions	4
Locking type	Push Pull
Coding type	D (Data)
Handle color	black
Flammability rating according to UL 94	V0
Material	CuSn (Contact)
	Ni/Au (Contact surface)
	PA (Contact carriers)
	TPU, hardly inflammable, self-extinguishing (Grip)
	Zinc die-cast, nickel-plated (Screw connection)
	FKM (Seal)
Insertion/withdrawal cycles	≥ 100
Insulation resistance	≥ 100 MΩ
Overvoltage category	II
Degree of pollution	3
Degree of protection	IP67

Ambient temperature (operation)	-25 °C ... 85 °C

Connection 2

Type	Socket straight M12 Push Pull / IP67
Number of positions	4
Locking type	Push Pull
Coding type	D (Data)
Handle color	black
Flammability rating according to UL 94	V0
Material	CuSn (Contact)
	Ni/Au (Contact surface)
	PA (Contact carriers)
	TPU, hardly inflammable, self-extinguishing (Grip)
	Zinc die-cast, nickel-plated (Screw connection)
	FKM (Seal)
Insertion/withdrawal cycles	≥ 100
Insulation resistance	≥ 100 MΩ
Degree of pollution	3
Overvoltage category	II
Degree of protection	IP67
Ambient temperature (operation)	-25 °C ... 85 °C

Cable/line

Cable length	0.3 m

Ethernet flexible CAT5, 2-pair [93E]

Dimensional drawing	
Cable weight	42 kg/km
UL AWM Style	20963 (80°C/30 V)
Wiring standards/regulations	Electrical requirements EN 50288-2-2
Number of positions	4
Shielded	yes
Cable type	Ethernet flexible CAT5, 2-pair [93E]
Conductor structure	2x2xAWG26/7, SF/UTP
Signal runtime	5.3 ns/m
Conductor structure signal line	7x 0.16 mm
AWG signal line	26
Conductor cross section	2x 2x 0.14 mm²

Wire diameter incl. insulation	0.98 mm
External cable diameter	6.40 mm ±0.2 mm
Outer sheath, material	PUR
External sheath, color	water blue RAL 5021
Conductor material	Bare Cu litz wires
Material wire insulation	Foamed PE
Single wire, color	white/orange-orange, white/green-green
Thickness, outer sheath	1.20 mm
Twisted pairs	2 cores to the pair
Overall twist	Two pairs with two fillers to the core
Optical shield covering	70 %
Insulation resistance	≥ 500 MΩ*km
Coupling resistance	≤ 100.00 mΩ/m (at 10 MHz)
Loop resistance	≤ 290.00 Ω/km
Wave impedance	100 Ω ±5 Ω (at 100 MHz)
Cable capacity	approx. 45 nF/km (at 1 kHz)
Nominal voltage, cable	≤ 100 V (Peak value, not for high-power applications)
Test voltage Core/Core	700 V (50 Hz, 1 min.)
Test voltage Core/Shield	700.00 V (50 Hz, 1 min.)
Current carrying capacity of cable	2.00 A (according to DIN VDE 0891-1)
Minimum bending radius, fixed installation	4 x D
Minimum bending radius, flexible installation	8 x D
Smallest bending radius, fixed installation	26 mm
Smallest bending radius, movable installation	52 mm
Tensile strength	≤ 80 N
Near end crosstalk attenuation (NEXT)	65.3 dB (with 1 MHz)
	56.3 dB (at 4 MHz)
	50.3 dB (at 10 MHz)
	47.2 dB (at 16 MHz)
	45.8 dB (at 20 MHz)
	42.9 dB (at 31.25 MHz)
	38.4 dB (at 62.5 MHz)
	35.3 dB (at 100 MHz)
Power-summated near end crosstalk attenuation (PSNEXT)	62.3 dB (with 1 MHz)
	53.3 dB (at 4 MHz)
	47.3 dB (at 10 MHz)
	44.2 dB (at 16 MHz)
	42.8 dB (at 20 MHz)
	39.9 dB (at 31.25 MHz)
	35.4 dB (at 62.5 MHz)
	32.3 dB (at 100 MHz)
Return attenuation (RL)	23 dB (at 4 MHz)
	24.1 dB (at 8 MHz)
	25 dB (at 10 MHz)

	25 dB (at 16 MHz)
	25 dB (at 20 MHz)
	23.6 dB (at 31.25 MHz)
	21.5 dB (at 62.5 MHz)
	20.1 dB (at 100 MHz)
Shield attenuation	3.2 dB (with 1 MHz)
	6 dB (at 4 MHz)
	9.5 dB (at 10 MHz)
	12.1 dB (at 16 MHz)
	13.6 dB (at 20 MHz)
	17.1 dB (at 31.25 MHz)
	24.8 dB (at 62.5 MHz)
	32 dB (at 100 MHz)
Halogen-free	according to IEC 60754-1
Flame resistance	according to IEC 60332-1-2
	in acc. to UL VW1
	in accordance with UN ECE-R 118.03
Resistance to oil	in accordance with EN 60811-2-1
Ambient temperature (operation)	-40 °C ... 80 °C (cable, fixed installation)
	-20 °C ... 80 °C (Cable, flexible installation)
Ambient temperature (installation)	-20 °C ... 80 °C

Environmental and real-life conditions

Ambient conditions

Ambient temperature (operation)	-25 °C ... 85 °C (Plug / socket)

Drawings

Schematic diagram

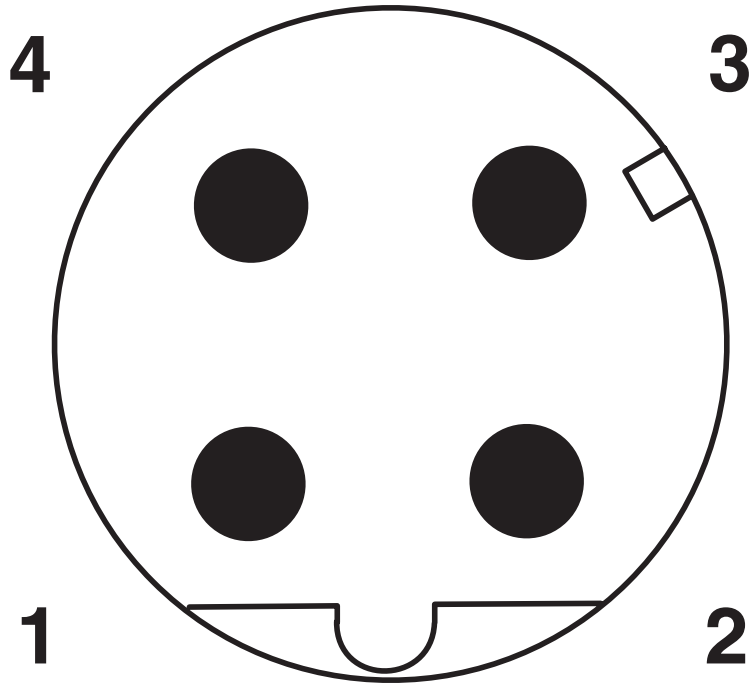

Pin assignment M12 male connector, 4-pos., D-coded, male side

Dimensional drawing

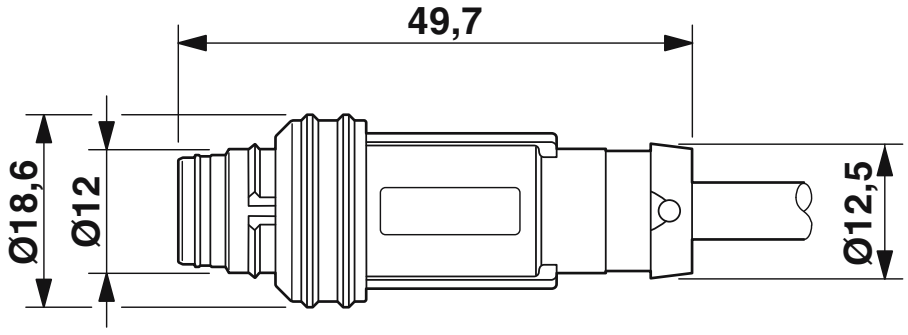

M12 push-pull male connector, straight

Dimensional drawing

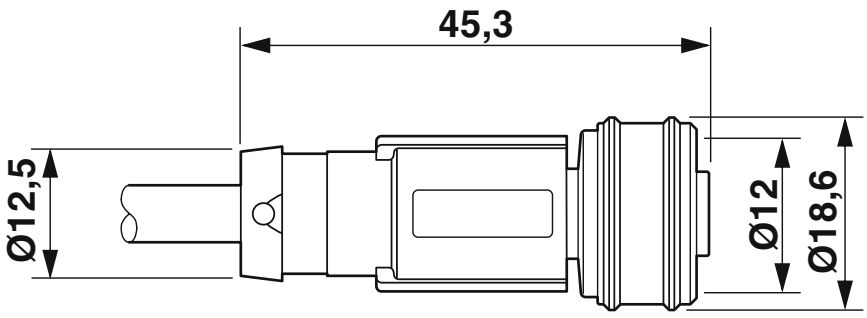

M12 push-pull female connector, straight

Schematic diagram

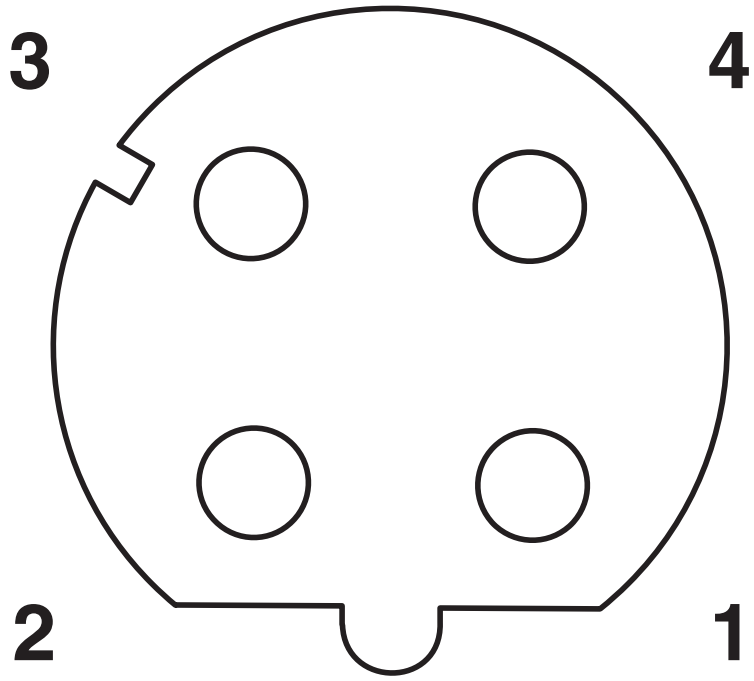

Pin assignment M12 socket, 4-pos., D-coded, female side

Circuit diagram

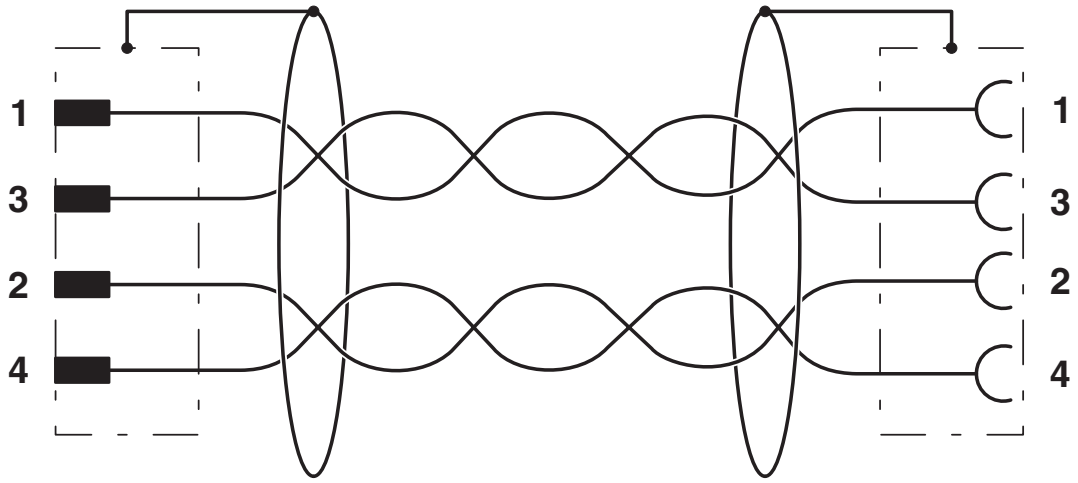

Classifications

ECLASS

ECLASS-11.0	27060307
ECLASS-12.0	27060307
ECLASS-13.0	27060307

ETIM

ETIM 9.0	EC001855

Environmental product compliance

EU RoHS

Fulfills EU RoHS substance requirements	Yes, No exemptions

China RoHS

Environment friendly use period (EFUP)	EFUP-E
	No hazardous substances above the limits

EU REACH SVHC

REACH candidate substance (CAS No.)	No substance above 0.1 wt%

Accessories

PROT-M12 FS-PA-CHAIN - Sealing cap

1430873

https://www.phoenixcontact.com/us/products/1430873



M12 sealing cap made of plastic with fixing band, for sensor cables, for free M12 plugs

SAC-M12-EXCLIP-M - Locking clip

1558988

https://www.phoenixcontact.com/us/products/1558988



Locking clip for the pin side of sensor/actuator cables with M12 connector and M12 connectors for assembly, for knurl diameter: 15 mm or for Allen key with a wrench size of 14 mm, prevents the disconnection of plug-in connections without tools

TSD 04 SAC - Torque screwdriver

1208429

https://www.phoenixcontact.com/us/products/1208429



Torque screwdriver, with preset torque of 0.4 Nm and 4 mm hexagonal drive for M12 connectors

TSD-M 1,2NM - Torque screwdriver

1212224

https://www.phoenixcontact.com/us/products/1212224



Torque screw driver, accuracy as per EN ISO 6789 standard, adjustable from 0. 3 - 1.2 Nm

TSD-M SAC-BIT ADAPTER - Adapter insert

1212600

https://www.phoenixcontact.com/us/products/1212600



Adapter bit for TSD-M...torque tools, E6.3-1/4" drive with 4 mm hexagon to accommodate SAC bits

SAC BIT M12-D15 - Tool

1208432

https://www.phoenixcontact.com/us/products/1208432



Nut for assembling sensor/actuator cables with M12 connector and M12 connectors for assembly, with a knurl diameter of 15 mm, for 4 mm hexagonal drive

Phoenix Contact 2024 © - all rights reserved
https://www.phoenixcontact.com

Phoenix Contact USA
586 Fulling Mill Road
Middletown, PA 17057, United States
(+717) 944-1300
info@phoenixcon.com