Inductive ring sensor

RJ43-E2



- 43 mm inside diameter
- 3-wire DC

Dimensions

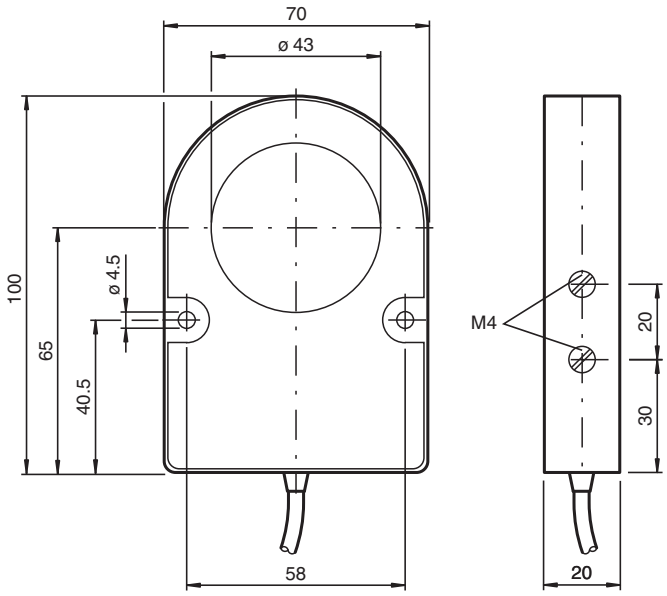

Technical Data

General specifications		
Switching function		Normally open (NO)
Output type		PNP
Output polarity		DC
Inside diameter		43 mm
Measuring cylinder		
Diameter		9 mm
Length		18 mm
Material		9S20K
Output type		3-wire
Nominal ratings		
Operating voltage	U_B	10 ... 30 V DC
Switching frequency	f	0 ... 500 Hz
Hysteresis	H	typ. 5%

Release date: 2025-07-14 Date of issue: 2025-07-14 Filename: 012368_eng.pdf

Technical Data

Reverse polarity protection		reverse polarity protected
Short-circuit protection		pulsing
Voltage drop	U_d	≤ 3 V
Operating current	I_L	0 ... 200 mA
No-load supply current	I_0	≤ 20 mA
Functional safety related parameters		
$MTTF_d$		1326 a
Mission Time (T_M)		20 a
Diagnostic Coverage (DC)		0 %
Compliance with standards and directives		
Standard conformity		
Standards		EN IEC 60947-5-2
Approvals and certificates		
UL approval		cULus Listed Load Type: General Purpose Circuitry: Class 2 Power Source Enclosure Type Rating: Type 1 Supply/Switching Voltage: 30 V DC Output Switching Current: 200 mA
Ambient conditions		
Ambient temperature		-25 ... 70 °C (-13 ... 158 °F)
Mechanical specifications		
Connection type		cable
Housing material		PBT
Degree of protection		IP67
Cable		
Wire end ferrules		yes
Cable diameter		4.6 mm ± 0.2 mm
Bending radius		> 10 x cable diameter
Material		PVC
Color		grey
Number of cores		3
Core cross section		0.34 mm^2
Length	L	2 m
Dimensions		
Height		100 mm
Width		70 mm
Length		20 mm

Connection Assignment

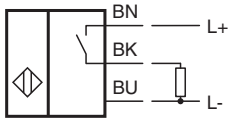

Release date: 2025-07-14 Date of issue: 2025-07-14 Filename: 012368_eng.pdf