ESD-R-341616H-NC23

Aliases (UECESDN0341603)

KEMET, ESD-R-NC, EMI Cores, Noise Suppression

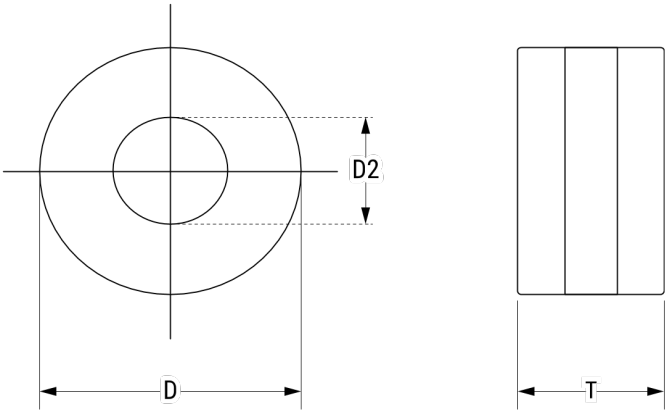

Click here for the 3D model.

Dimensions	
D	34mm MAX
D2	16.5mm +/-1mm
T	16mm MAX

Packaging Specifications	
Packaging	Tray, Box
Packaging Quantity	300
Typical Component Weight	30 g

General Information	
Series	ESD-R-NC
Style	Round - Toroidal
Cable Type	Round Cable
Description	EMI Core Solid, Large-Size Ring Type, For Round Cables
Features	Low and High Frequency Range, Flame Retardancy
RoHS	Yes
SCIP Number	d5c28613-591c-4483-83c1-5d29064c1b21
Qualifications	UL94V-0
Case Color	Black with yellow tape
Materials	Nanocrystal

Specifications	
Temperature Range	-40/+120°C
Effective Frequency	10 MHz (AM Band Range) or 500 MHz (FM Band Range)

Statements of suitability for certain applications are based on our knowledge of typical operating conditions for such applications, but are not intended to constitute - and we specifically disclaim - any warranty concerning suitability for a specific customer application or use. This Information is intended for use only by customers who have the requisite experience and capability to determine the correct products for their application. Any technical advice inferred from this Information or otherwise provided by us with reference to the use of our products is given gratis, and we assume no obligation or liability for the advice given or results obtained.

© 2006 - 2024 KEMET