# CAV4201

# 350 mA High Efficiency Step Down LED Driver

DISCONTINUED
THIS DEVICE IS NOT RECOMMENDED FOR NEW DESIGN
PLEASE CONTACT YOUR onsemi REPRESENTATIVE FOR INFORMATION

### Description

The CAV4201 is a high efficiency step−down converter optimized to drive high current LEDs. A patented switching control algorithm allows highly efficient and accurate LED current regulation. A single RSET resistor sets the full scale LED string current up to 350 mA from supplies as high as 36 V.

The switching architecture of the CAV4201 results in extremely low internal power dissipation allowing the device to be housed in a tiny package without the need for dedicated heat sinking. The device is compatible with switching frequencies of up to 1 MHz, making it ideal for applications requiring small footprint and low value external inductors.

Enable, analog dimming and LED shutdown control is provided via a single input pin, CTRL. Additional features include overload current protection and thermal shutdown. The device is available in the low profile 5−lead thin SOT23 package and is ideal for space constrained applications.

### Features

- LED Drive Current up to 350 mA
- Compatible with 12 V and 24 V Standard Systems
- Handles Transients up to 40 V
- Single Pin Control and Dimming Function
- Power Efficiency up to 94%
- Drives LED Strings of up to 32 V
- Open and Short LED Protection
- Parallel Configuration for Higher Output Current
- CAV Prefix for Automotive and Other Applications requiring Site and Change Control
- TSOT−23 5−lead Package
- These Devices are Pb−Free, Halogen Free/BFR Free and are RoHS Compliant

### Applications

- 12 V and 24 V Lighting Systems
- Automotive and Aircraft Lighting
- General Lighting
- High Brightness 350 mA LEDs

**ON Semiconductor®**

**http://onsemi.com**

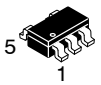


**TSOT−23**
**TD SUFFIX**
**CASE 419AE**

**PIN CONNECTIONS**

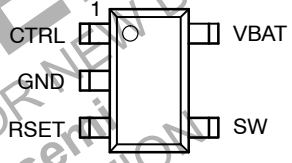


(Top View)

**MARKING DIAGRAMS**

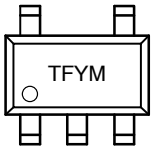


TF = Device Code
Y = Production Year (Last Digit)
M = Production Month: 1−9, A, B, C

**ORDERING INFORMATION**

| Device | Package | Shipping |
|---|---|---|
| CAV4201TD−GT3 | TSOT−23 (Pb−Free) | 3,000/ Tape & Reel |

* Plated Finish: NiPdAu

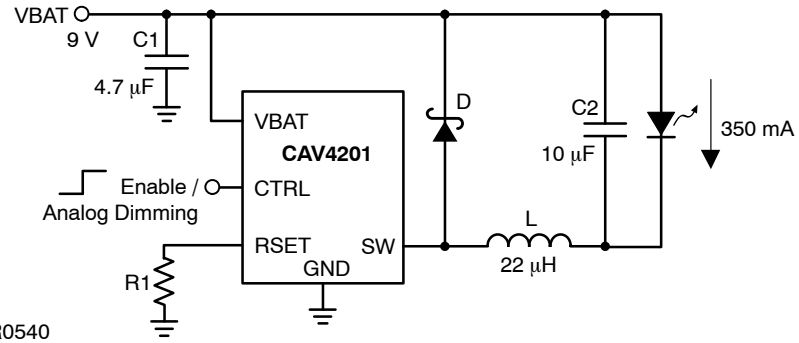


D: ON Semiconductor MBR0540
L: Sumida CDRH6D26−220
See Table 4 and Table 5 for external component selection.

**Figure 1. Typical Application Circuit**

© Semiconductor Components Industries, LLC, 2011

**Table 1. ABSOLUTE MAXIMUM RATINGS**

| Parameters | Ratings | Units |
|---|---|---|
| VBAT, SW, CTRL | −0.3 to +40 | V |
| RSET | −0.3 to +5 | V |
| Switch SW peak current | 1 | A |
| Storage Temperature Range | −65 to +160 | °C |
| Junction Temperature Range | −40 to +150 | °C |
| Lead Temperature | 300 | °C |

Stresses exceeding Maximum Ratings may damage the device. Maximum Ratings are stress ratings only. Functional operation above the Recommended Operating Conditions is not implied. Extended exposure to stresses above the Recommended Operating Conditions may affect device reliability.

**Table 2. RECOMMENDED OPERATING CONDITIONS**

| Parameters | Ratings | Units |
|---|---|---|
| VBAT voltage (Notes 1, 2) | 6.5 to 36 (Note 1) | V |
| SW voltage | 0 to 36 | V |
| Ambient Temperature Range | −40 to +125 | °C |
| LED Current | 50 to 350 | mA |
| Switching Frequency | 50 to 1000 | kHz |

1. The VBAT pin voltage should be at least 3 V greater than the total sum of the LED forward voltages in order to operate at nominal LED current.
2. During power−up, the slew rate of the input supply should be greater than 1 μs for every 5 V increase of VBAT.

DISCONTINUED
THIS DEVICE IS NOT RECOMMENDED FOR NEW DESIGN
PLEASE CONTACT YOUR onsemi
REPRESENTATIVE FOR INFORMATION

**Table 3. ELECTRICAL CHARACTERISTICS**
($V_{IN}$ = 13 V, ambient temperature of 25°C (over recommended operating conditions unless otherwise specified))

| Symbol | Parameter | Conditions | Min | Typ | Max | Units |
|---|---|---|---|---|---|---|
| $I_Q$ | Operating Supply Current on VBAT pin | | | 0.4 | 1 | mA |
| $I_{SD}$ | Idle Mode Supply Current on VBAT pin | CTRL = GND | | 90 | | μA |
| $V_{FB}$ | RSET Pin Voltage | 2 LEDs with $I_{LED}$ = 300 mA | 1.15 | 1.2 | 1.25 | V |
| $I_{LED}$ | Programmed LED Current | R1 = 33 kΩ<br>R1 = 10 kΩ<br>R1 = 8.25 kΩ | 270 | 100<br>300<br>350 | 330 | mA |
| $V_{CTRL-FULL}$ | CTRL Voltage for 100% Brightness | | | 2.6 | 3.1 | V |
| $V_{CTRL-EN}$ | CTRL Voltage to Enable LEDs | LED enable voltage threshold | | 0.9 | 1.2 | V |
| $V_{CTRL-SD}$ | CTRL Voltage to Shutdown LEDs | LED disable voltage threshold | 0.4 | 0.9 | | V |
| $I_{CTRL}$ | CTRL pin input bias | $V_{CTRL}$ = 3 V<br>$V_{CTRL}$ = 12 V | | 40<br>200 | 80 | μA |
| $R_{SW}$ | Switch “On” Resistance | $I_{SW}$ = 300 mA | | 0.9 | 1.5 | Ω |
| $T_{SD}$ | Thermal Shutdown | | | 150 | | °C |
| $T_{HYST}$ | Thermal Hysteresis | | | 20 | | °C |
| η | Efficiency | Typical Application Circuit | | 86 | | % |

## TYPICAL OPERATION CHARACTERISTICS

($V_{IN}$ = 13 V, $I_{LED}$ = 300 mA, L = 22 μH, $C_1$ = 4.7 μF, $C_2$ = 10 μF, $T_{AMB}$ = 25°C unless otherwise specified)

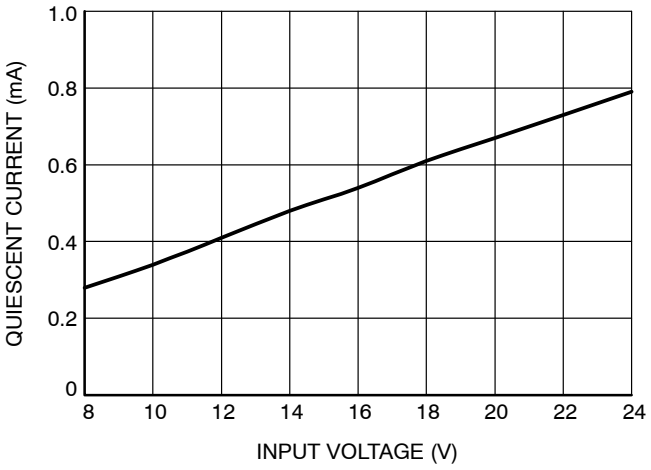


**Figure 2. Input Operating Supply Current**

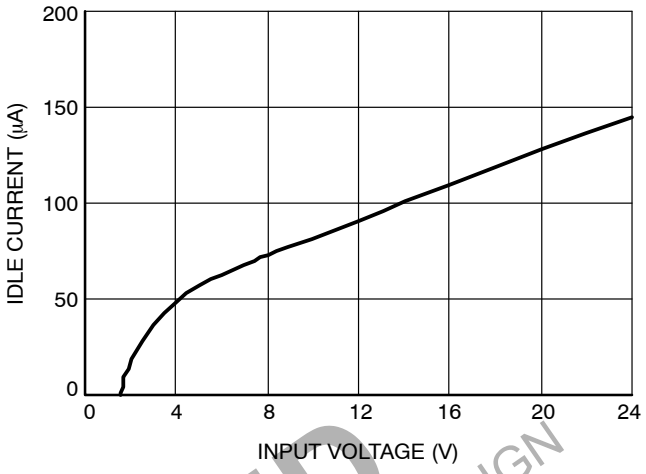


**Figure 3. Idle Mode Supply Current (CTRL = 0 V)**

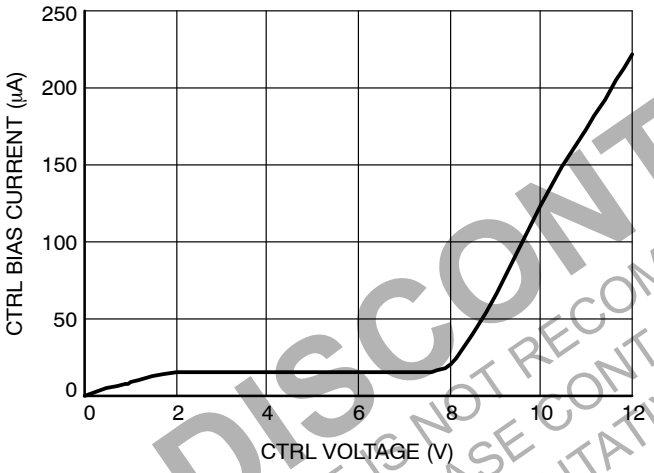


**Figure 4. CTRL Input Bias Current**

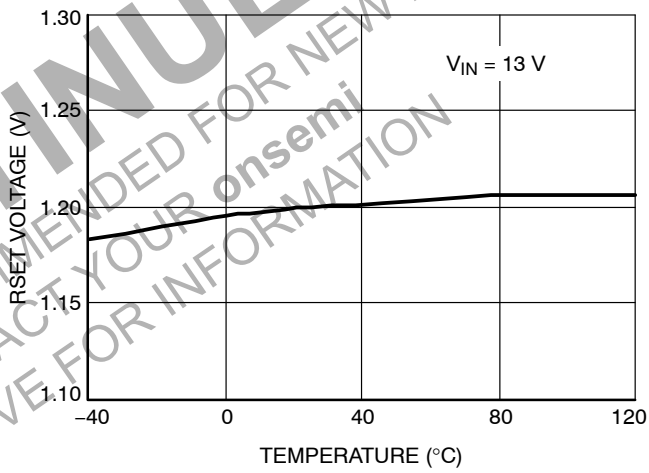


**Figure 5. RSET Voltage vs. Temperature**

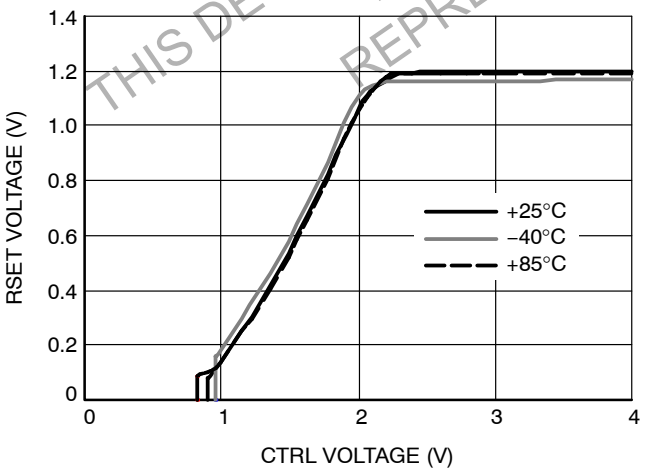


**Figure 6. RSET Voltage vs. CTRL Voltage**

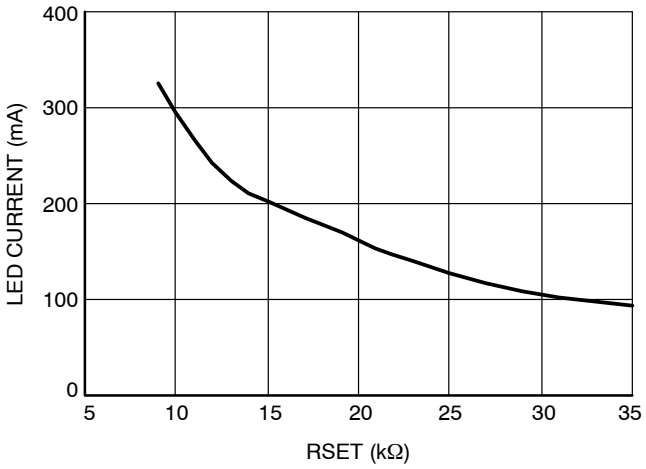


**Figure 7. LED Current vs. RSET**

DISCONTINUED
THIS DEVICE IS NOT RECOMMENDED FOR NEW DESIGN
PLEASE CONTACT YOUR onsemi
REPRESENTATIVE FOR INFORMATION

## TYPICAL OPERATION CHARACTERISTICS

($V_{IN}$ = 13 V, $I_{LED}$ = 300 mA, L = 22 μH, $C_1$ = 4.7 μF, $C_2$ = 10 μF, $T_{AMB}$ = 25°C unless otherwise specified)

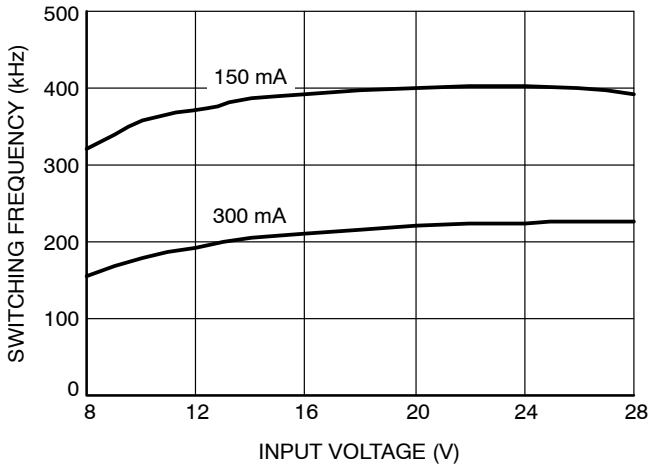


**Figure 8. Switching Frequency vs. Input Voltage (1 LED)**

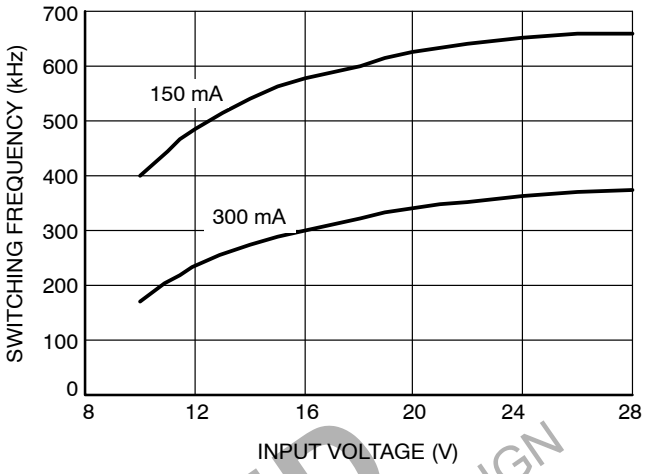


**Figure 9. Switching Frequency vs. Input Voltage (2 LEDs)**

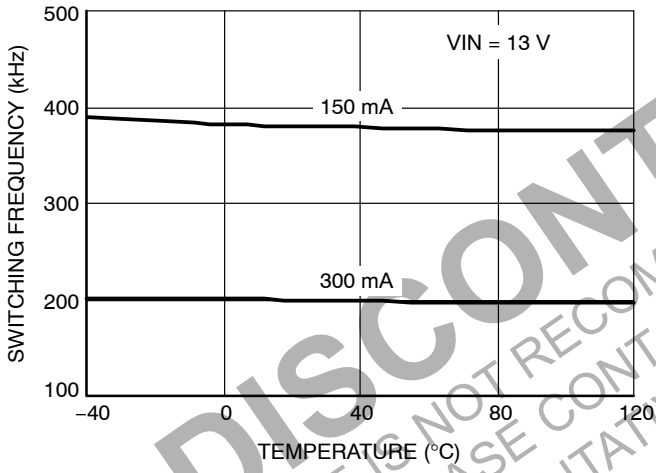


**Figure 10. Switching Frequency vs. Temperature**

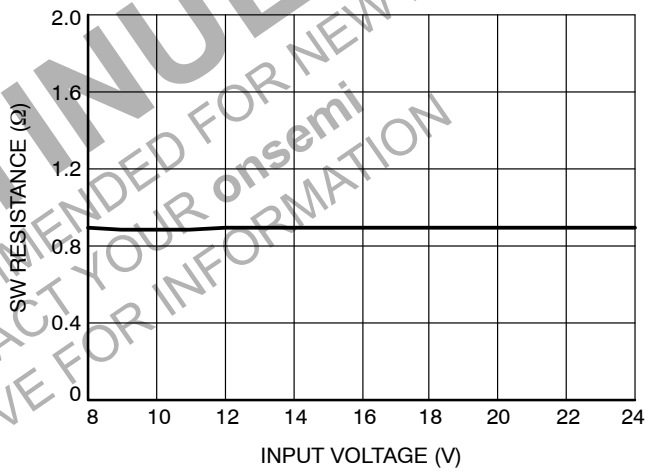


**Figure 11. Switch ON Resistance vs. Input Voltage**

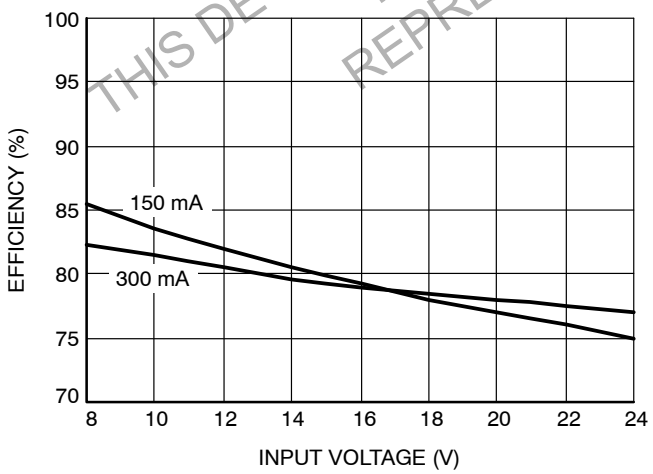


**Figure 12. Efficiency vs. Input Voltage (1 LED)**

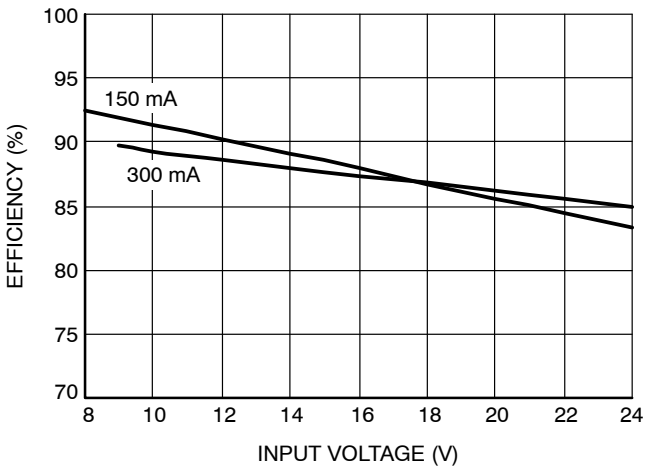


**Figure 13. Efficiency vs. Input Voltage (2 LEDs)**

DISCONTINUED
THIS DEVICE IS NOT RECOMMENDED FOR NEW DESIGN
PLEASE CONTACT YOUR onsemi
REPRESENTATIVE FOR INFORMATION

## TYPICAL OPERATION CHARACTERISTICS

($V_{IN}$ = 13 V, $I_{LED}$ = 300 mA, L = 22 μH, $C_1$ = 4.7 μF, $C_2$ = 10 μF, $T_{AMB}$ = 25°C unless otherwise specified)

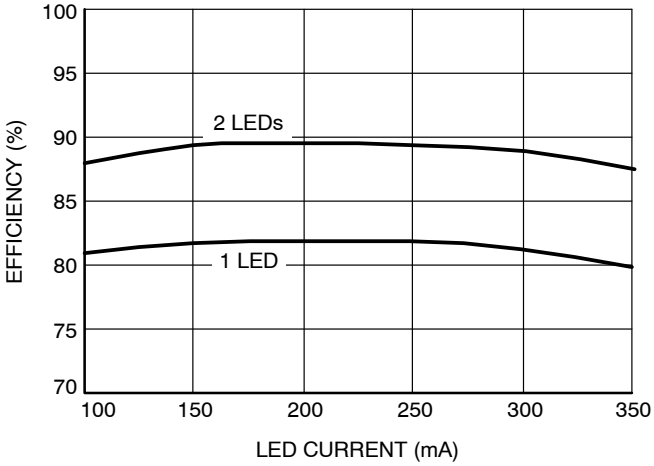


**Figure 14. Efficiency vs. LED Current**

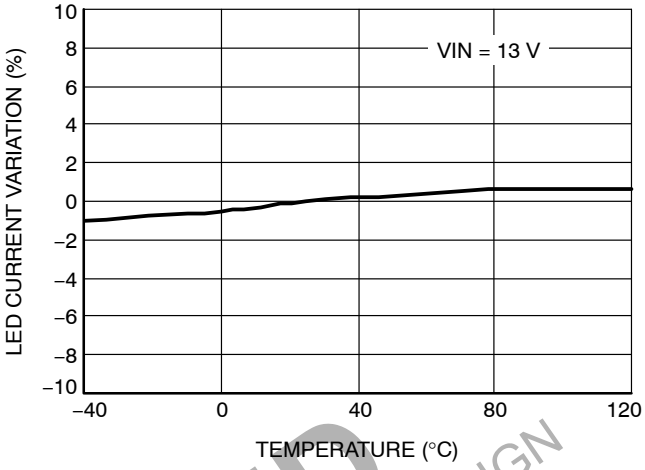


**Figure 15. LED Current Regulation vs. Temperature**

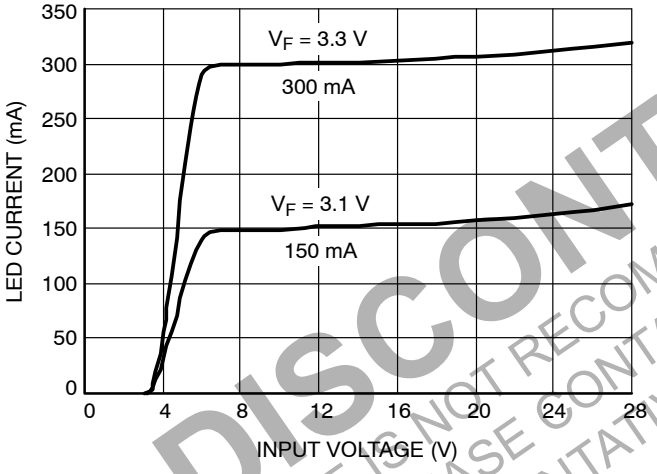


**Figure 16. LED Current vs. Input Voltage (1 LED)**

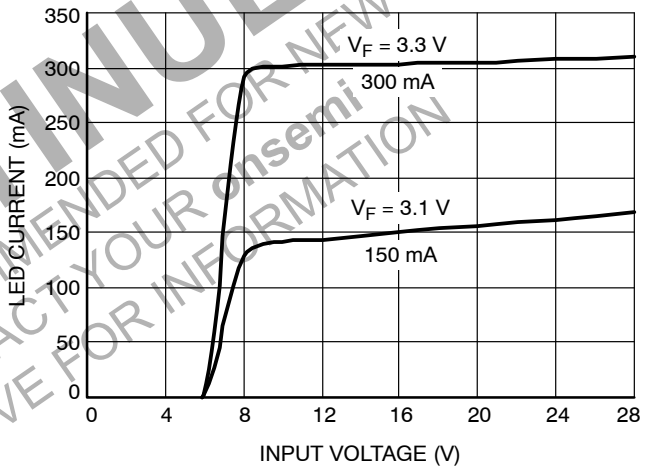


**Figure 17. LED Current vs. Input Voltage (2 LEDs)**

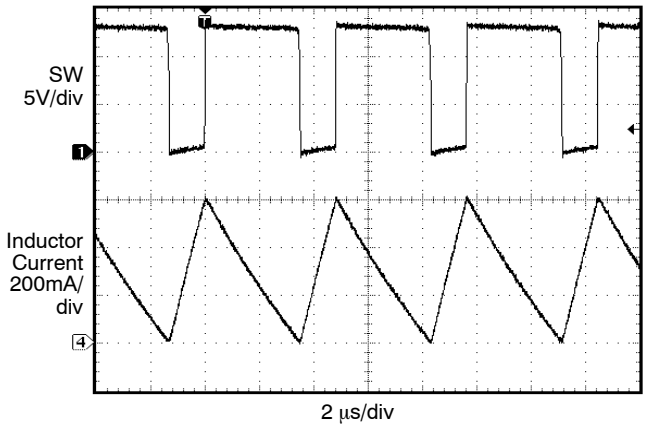


**Figure 18. Switching Waveforms**

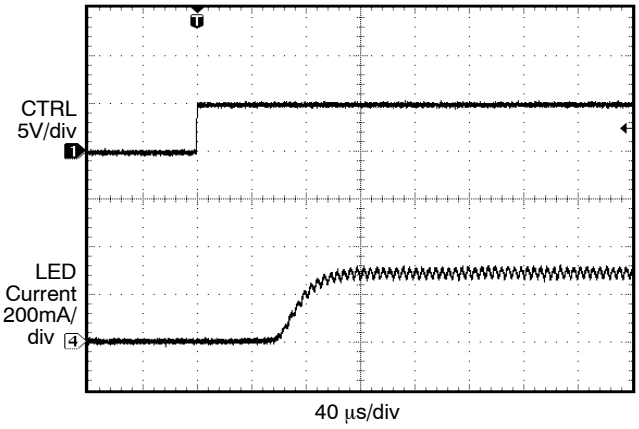


**Figure 19. CTRL Power−up**

DISCONTINUED
DEVICE IS NOT RECOMMENDED FOR NEW DESIGN
PLEASE CONTACT YOUR onsemi
REPRESENTATIVE FOR INFORMATION

## TYPICAL OPERATION CHARACTERISTICS

($V_{IN}$ = 13 V, $I_{LED}$ = 300 mA, L = 22 μH, $C_1$ = 4.7 μF, $C_2$ = 10 μF, $T_{AMB}$ = 25°C unless otherwise specified)

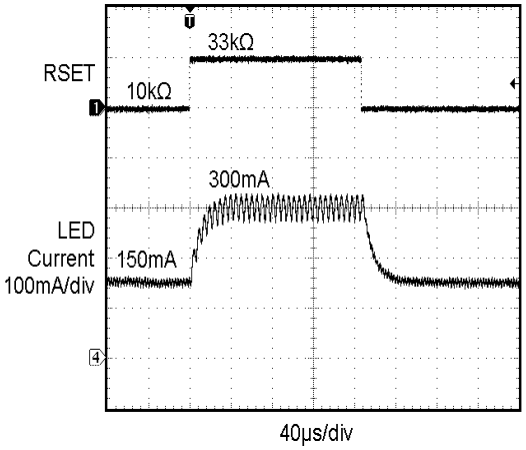


**Figure 20. RSET Transient Response**

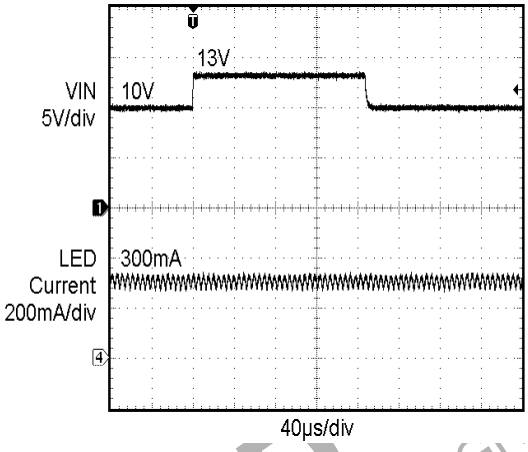


**Figure 21. Line Transient Response (10 V to 13 V)**

### External Component Selection

Table 4 provides the recommended external components L and C2 that offer the best performance relative to the LED current accuracy, LED ripple current, switching frequency and component size.

**Table 4. EXTERNAL COMPONENT SELECTION**

| | 1 LED | | 2 LEDs | |
|---|---|---|---|---|
| **LED Current (mA)** | **L Inductor (μH)** | **C2 Capacitor (μF)** | **L Inductor (μH)** | **C2 Capacitor (μF)** |
| ≥150 | 22 | 4.7 | 22 | 4.7 |
| < 150 | 33 | 4.7 | 47 | 2.2 |
| | 47 | 10 | | |

NOTE: Larger C2 capacitor values allow to reduce further the LED ripple current if needed.

**Table 5. INDUCTOR SELECTION DEPENDING ON VBAT SUPPLY VOLTAGE**

| VBAT Supply Voltage (V) | Minimum Inductor L (μH) |
|---|---|
| < 26 | 22 |
| ≥ 26 | 33 |

DISCONTINUED
THIS DEVICE IS NOT RECOMMENDED FOR NEW DESIGN
PLEASE CONTACT YOUR onsemi
REPRESENTATIVE FOR INFORMATION

**Table 6. PIN DESCRIPTION**

| Pin | Name | Function |
|---|---|---|
| 1 | CTRL | Enable and analog dimming control input pin. |
| 2 | GND | Ground reference. |
| 3 | RSET | RSET pin. A resistor connected between the pin and ground sets the average LED current. |
| 4 | SW | Interface to the inductor. |
| 5 | VBAT | Supply voltage for the device. |

## Pin Function

**VBAT** is the supply input to the device. Typical current conduction into this pin is less than 1 mA and voltage transients of up to 40 V can be applied. To ensure accurate LED current regulation, the VBAT voltage should be 3 V higher than the total forward voltage of the LED string. A bypass capacitor of 4.7 μF or larger is recommended between VBAT and GND.

**CTRL** is the enable and analog dimming control input. An internal pull−down current of 20 μA allows the LEDs to shutdown if CTRL is left floating. Voltages of up to 40 V can be safely handled by the CTRL input pin.

When the CTRL voltage is less than 0.9 V (typ), the LEDs will shutdown to zero current. When the CTRL voltage is greater than about 2.6 V, the device is enabled and full scale brightness is applied to the LED output. At voltages of less than around 2.6 V, the LED current is progressively dimmed until shutdown.

For lamp replacement applications, or applications where operation in dropout mode is expected, it is recommended that the CTRL pin voltage be derived from the LED cathode terminal.

**GND** is the ground reference pin. This pin should be connected directly to the ground plane on the PCB.

**SW** pin is the drain terminal of the internal low resistance high−voltage power MOSFET. The inductor and the Schottky diode anode should be connected to the SW pin. Voltages of up to 40 V can be safely handled on the SW pin. Traces going to the SW pin should be as short as possible with minimum loop area. The device can handle safely “open−LED” or “shorted−LED” fault conditions.

**RSET** pin is regulated at 1.2 V. A resistor connected between the RSET pin and ground sets the LED full−scale brightness current. The external resistance value and the CTRL pin voltage determine the LED current during analog dimming. The RSET pin must not be left floating. The highest recommended resistor value between RSET and ground is 90 kΩ.

DISCONTINUED
THIS DEVICE IS NOT RECOMMENDED FOR NEW DESIGN
PLEASE CONTACT YOUR onsemi
REPRESENTATIVE FOR INFORMATION

## Simplified Block Diagram

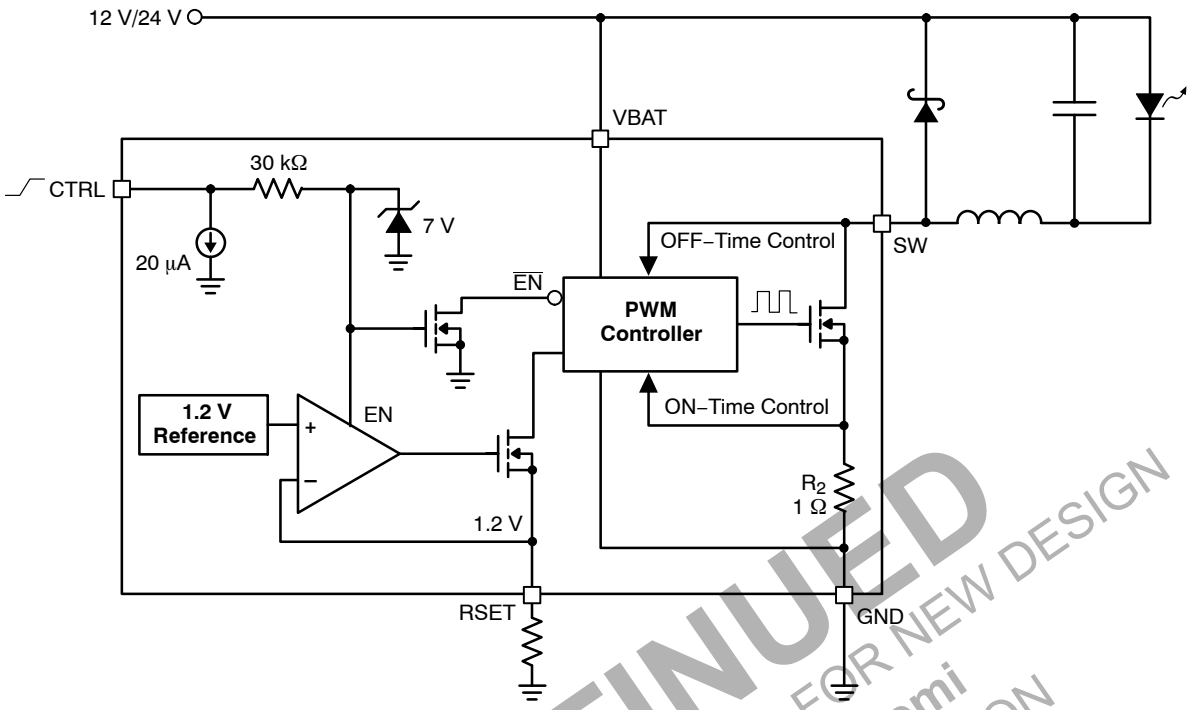


**Figure 22. CAV4201 Simplified Block Diagram**

DISCONTINUED
THIS DEVICE IS NOT RECOMMENDED FOR NEW DESIGN
PLEASE CONTACT YOUR onsemi
REPRESENTATIVE FOR INFORMATION

### Basic Operation

The CAV4201 is a high efficiency step−down regulator designed to drive series connected high−power LEDs. LED strings with total forward voltages of up to 32 V can be driven with bias currents of up to 350 mA.

During the first switching phase, an integrated high voltage power MOSFET allows the inductor current to charge linearly until the peak maximum level is reached, at which point the MOSFET is switched off and the second phase commences, allowing the inductor current to then flow through the Schottky diode circuit and discharge linearly back to zero current.

The switching architecture ensures the device will always operate at the cross−over point between Continuous Conduction Mode (CCM) and Discontinuous Conduction Mode (DCM). This operating mode results in an average LED current which is equal to half of the peak switching current.

### LED Pin Current

The LED current is set by the external RSET resistor connected to the regulated output of the RSET pin. An overall current gain ratio of approximately 2.5 A/mA exists between the average LED current and the RSET current, hence the following equation can be used to calculate the LED current.

$$\text{LED Current (A)} \cong 2.5 \times \frac{V_{RSET}\ (V)}{R_{SET}\ (k\Omega)}$$

Table 7 lists the various LED currents and the associated RSET resistors.

**Table 7. RSET RESISTOR SELECTION**

| LED Current (A) | RSET (kΩ) |
|---|---|
| 0.10 | 33 |
| 0.15 | 21 |
| 0.20 | 15 |
| 0.25 | 12 |
| 0.30 | 10 |
| 0.35 | 8.25 |

## APPLICATION INFORMATION

### Input Voltage Range

The minimum supply voltage required to maintain adequate regulation is set by the cathode terminal voltage of the LED string (i.e., the VBAT voltage minus the LED string voltage). When the LED cathode terminal falls below 3 V, a loss of regulation occurs.

For applications which may occasionally need to experience supply “dropout” conditions, it is recommended that the CTRL input be used to sense the LED cathode voltage. The CTRL pin can either be tied directly to the cathode terminal (for Lamp Replacement) or connected via a pass−transistor for PWM lighting applications.

Figure 23 shows the regulation performance obtained in dropout, when the CTRL pin is configured to sense the LED cathode voltage.

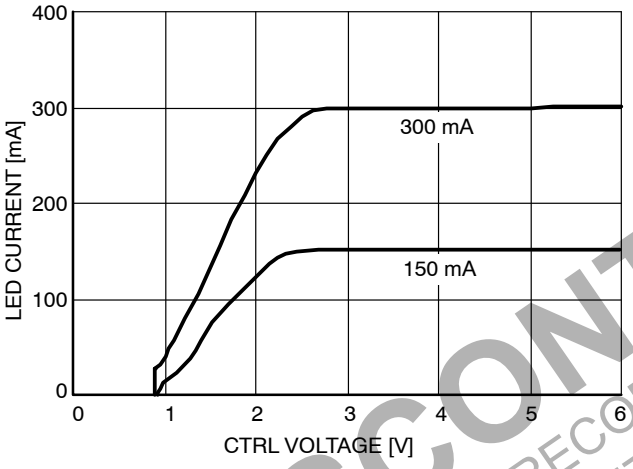


**Figure 23. “Dropout” Configured LED Current**
(as shown in Typical Application on page 1)

### Inductor Selection

A 22 μH minimum inductor value is required to provide suitable switching frequency across a wide range of input supply values. For LED current of 150 mA or less, a 33 μH or 47 μH inductor is more suitable. Inductor values below 22 μH should not be used.

An inductor with at least 700 mA current rating must be used. Minor improvements in efficiency can be achieved by selecting inductors with lower series resistance.

**Table 8. SUMIDA INDUCTORS**

| Part Number | L (μH) | I Rated (A) | LED Current (A) |
|---|---|---|---|
| CDRH6D26−220 | 22 | 1.0 | 0.35 |
| CDRH6D28−330 | 33 | 0.92 | 0.35 |
| CDRH6D28−470 | 47 | 0.8 | 0.35 |
| CDRH6D28−560 | 56 | 0.73 | 0.35 |

### Capacitor Selection

A 10 μF ceramic capacitor C2 across the LED(s) keeps the LED ripple current within ±15% of nominal for most applications. If needed, a larger capacitor can be used to further reduce the LED current ripple. Any resistance in series with the LED (0.5 Ω or more) contributes to reduce the ripple current. The capacitor voltage rating should be equivalent to the maximum expected supply voltage so as to allow for “Open−LED” fault conditions. The capacitor value is independent of the switching frequency or the overall efficiency.

A 4.7 μF ceramic input capacitor C1 is recommended to minimize the input current ripple generated on the supply. Using a larger capacitor value further reduces the ripple noise appearing on the supply rail.

If a constant capacitance is needed across temperature and voltage, X5R or X7R dielectric capacitors are recommended.

### Schottky Diode

The peak repetitive current rating of the Schottky diode must be greater than the peak current flowing through the inductor. Also the continuous current rating of the Schottky must be greater than the average LED current. The voltage rating of the diode should be greater than the peak supply voltage transient preventing any breakdown or leakage. ON Semiconductor Schottky diode MBR0540 (40 V, 500 mA rated) is recommended. Schottky diodes rated at 400 mA (or higher) continuous current are fine for most applications.

NOTE: Schottky diodes with extremely low forward voltages ($V_F$) are not recommended, as they may cause an increase in the LED current.

### Dimming Methods

Two methods for PWM dimming control on the LEDs are described below. The first method is to PWM on the control pin, the other method is to turn on and off a second resistor connected to the RSET pin and connected in parallel with R1.

### PWM on CTRL Pin

A PWM signal from a microprocessor can be used for dimming the LEDs when tied to the CTRL pin. The duty cycle which is the ratio between the On time and the total cycle time sets the dimming factor. The recommended PWM frequency on the CTRL pin is between 100 Hz and 2 kHz.

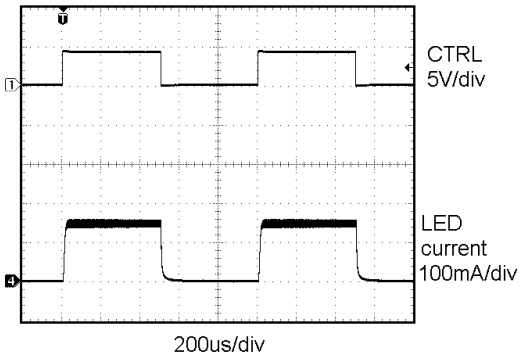


**Figure 24. PWM at 1 kHz on CTRL Pin**

DISCONTINUED
THIS DEVICE IS NOT RECOMMENDED FOR NEW DESIGN
PLEASE CONTACT YOUR onsemi
REPRESENTATIVE FOR INFORMATION

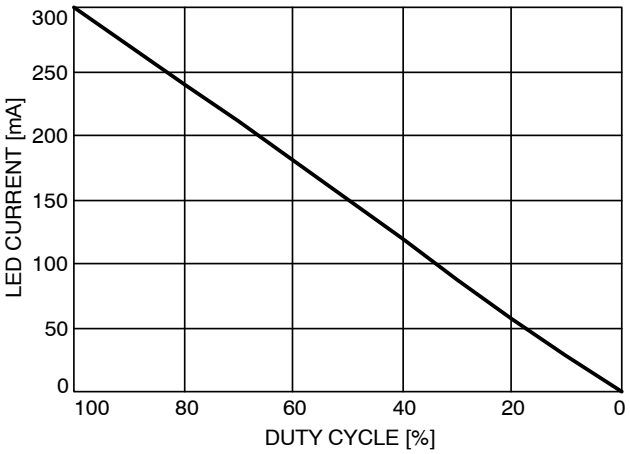


**Figure 25. LED Current vs. Duty Cycle**

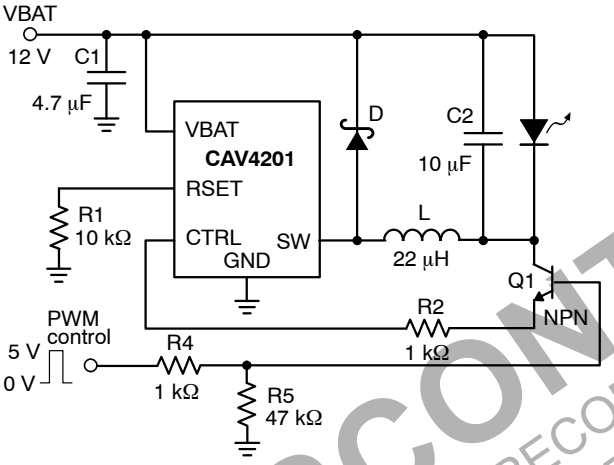


**Figure 26. Circuit for PWM on CTRL**

### PWM on RSET Pin

Another dimming method is to place in parallel to R1 another resistor with a FET in series, as shown on Figure 27. R1 sets the minimum LED current corresponding to 0% duty cycle. The combined resistor of R1 and Rmax sets the maximum LED current corresponding to 100% duty cycle.

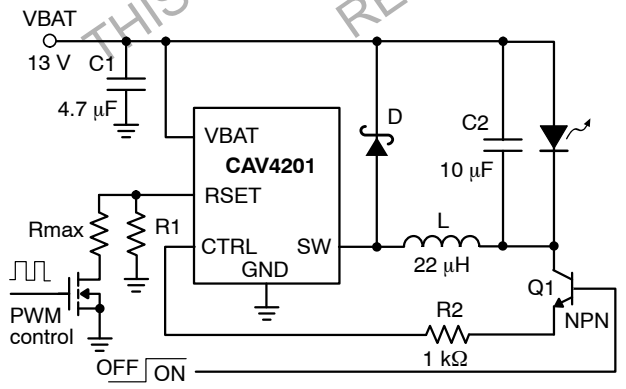


**Figure 27. Circuit for PWM on RSET**

A resistor value for R1 of less than 90 kΩ is recommended to provide better accuracy.

### Operation from High Supply Voltage Above 14 V

For operation from a supply voltage above 14 V, it is recommended to have a slew rate of 1 μs or more for every 5 V increase in VBAT supply. When using a high supply voltage of 24 V, a 1 Ω or 2 Ω resistor in series with the supply, as shown on Figure 28, is recommended to limit the slew rate of the supply voltage. A 4.7 μF minimum ceramic capacitor is placed between the VBAT pin and ground. The combination of the series resistor R3 and input capacitor C1 acts as a low pass filter limiting the excessive in−rush currents and overvoltage transients which would otherwise occur during “hot−plug” conditions, thereby protecting the CAV4201 driver.

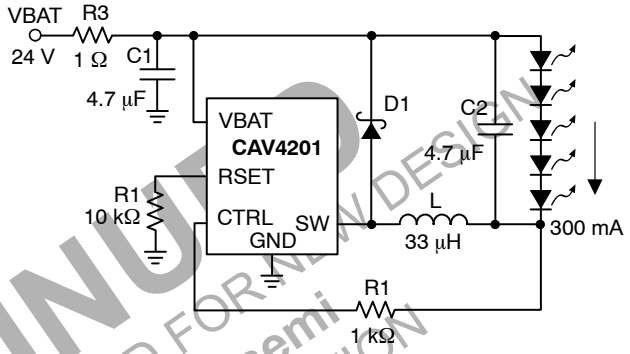


**Figure 28. 24 V Application with 5 LEDs**

### Operation from High Supply Voltage of 36 V

When powering from a high supply voltage of 36 V, a 2 Ω resistor in series with the supply is recommended, as shown on Figure 29, to limit the slew rate of the supply voltage. Inductor value should be 33 μH or higher.

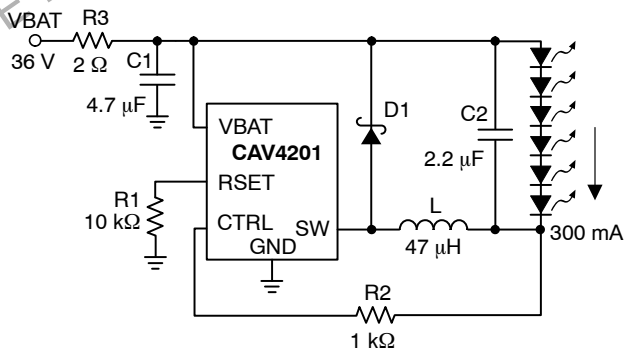


**Figure 29. 36 V Application with 6 LEDs**

### Parallel Configuration for Driving LEDs Beyond 350 mA

Several CAV4201 devices can be connected in parallel for driving LEDs with current in excess of 350 mA. The CAV4201 driver circuits are connected to the same LED cathode. Figure 30 shows the application schematic for driving 1 A into one LED with three CAV4201 connected in parallel. Each CAV4201 is driving the LED with a current set by its RSET resistor. The resulting LED current is equal to the sum of each driver current.

DISCONTINUED
THIS DEVICE IS NOT RECOMMENDED FOR NEW DESIGN
PLEASE CONTACT YOUR onsemi REPRESENTATIVE FOR INFORMATION

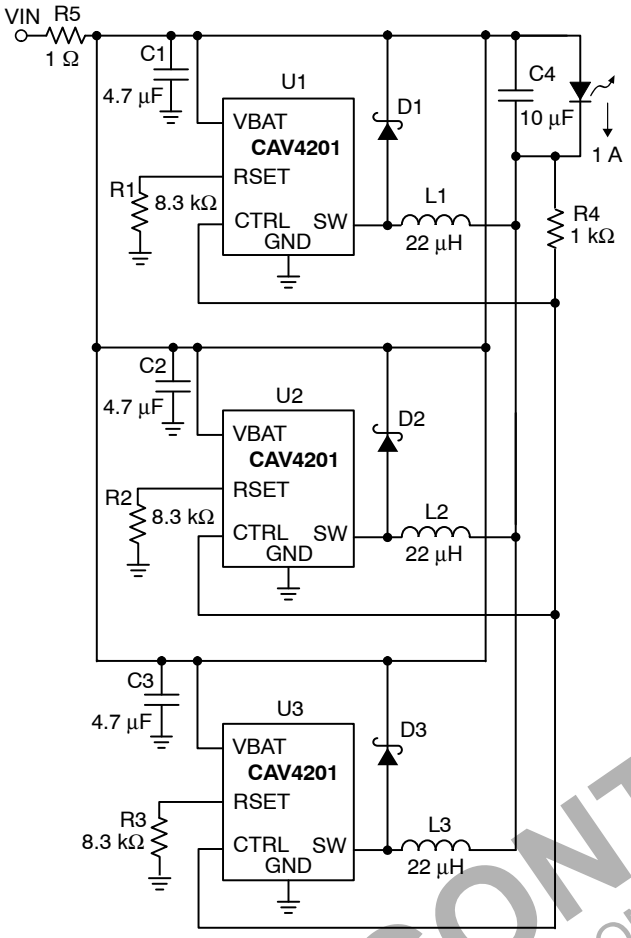


**Figure 30. Three CAV4201 in Parallel for 1 A LED**

### Open LED Behavior

If the LEDs are not connected, the CAV4201 stops switching and draws very little current.

At power−up with no load connected, the capacitor C2 is charged−up by the CAV4201. As soon as the bottom side of the capacitor (C2−) reaches 0 volt, as shown on Figure 31, the CAV4201 stops switching and remains in the idle mode only drawing about 0.4 mA current from the supply.

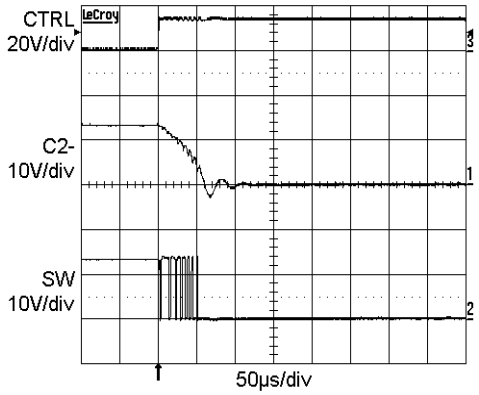


**Figure 31. Open LED Mode**

### Board Layout

In order to minimize EMI and switching noise, the Schottky diode, the inductor and the output capacitor C2 should all be located close to the driver IC. The input capacitor C1 should be located close to the VBAT pin and the Schottky diode cathode. The CAV4201 ground pin should be connected directly to the ground plane on the PCB. A recommended PCB layout with component location is shown on Figure 32. The LEDs are connected by two wires tied to both sides of the output capacitor C2. The LEDs can be located away from the driver if needed.

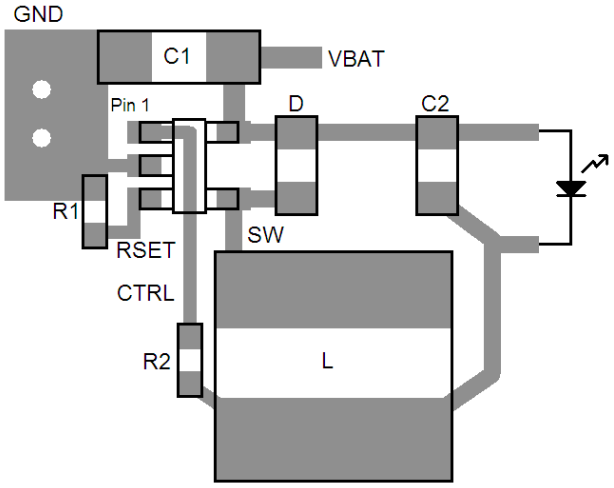


**Figure 32. Recommended PCB Layout**

In order to further reduce the ripple on the supply rail, an optional Pi style filter (C−L−C) can be used. A 10 µH inductor rated to the maximum supply current can be used.

DISCONTINUED
THIS DEVICE IS NOT RECOMMENDED FOR NEW DESIGN
PLEASE CONTACT
REPRESENTATIVE

**TSOT−23, 5 LEAD**
CASE 419AE−01
ISSUE O

DATE 19 DEC 2008

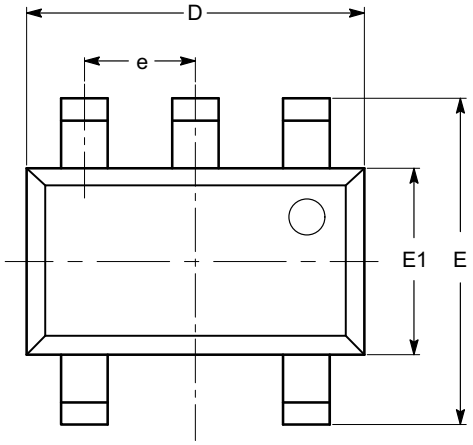


**TOP VIEW**

| SYMBOL | MIN | NOM | MAX |
|---|---|---|---|
| A | | | 1.00 |
| A1 | 0.01 | 0.05 | 0.10 |
| A2 | 0.80 | 0.87 | 0.90 |
| b | 0.30 | | 0.45 |
| c | 0.12 | 0.15 | 0.20 |
| D | | 2.90 BSC | |
| E | | 2.80 BSC | |
| E1 | | 1.60 BSC | |
| e | | 0.95 TYP | |
| L | 0.30 | 0.40 | 0.50 |
| L1 | | 0.60 REF | |
| L2 | | 0.25 BSC | |
| θ | 0° | | 8° |

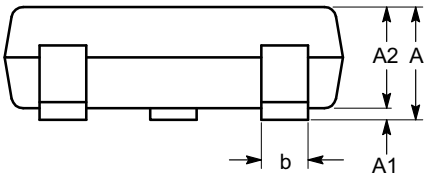


**SIDE VIEW**

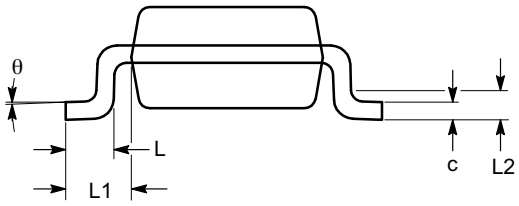


**END VIEW**

**Notes:**
(1) All dimensions are in millimeters. Angles in degrees.
(2) Complies with JEDEC MO-193.

| DOCUMENT NUMBER: | 98AON34392E | Electronic versions are uncontrolled except when accessed directly from the Document Repository. Printed versions are uncontrolled except when stamped "CONTROLLED COPY" in red. |
|---|---|---|
| DESCRIPTION: | TSOT−23, 5 LEAD | PAGE 1 OF 1 |

**onsemi** and onsemi are trademarks of Semiconductor Components Industries, LLC dba **onsemi** or its subsidiaries in the United States and/or other countries. **onsemi** reserves the right to make changes without further notice to any products herein. **onsemi** makes no warranty, representation or guarantee regarding the suitability of its products for any particular purpose, nor does **onsemi** assume any liability arising out of the application or use of any product or circuit, and specifically disclaims any and all liability, including without limitation special, consequential or incidental damages. **onsemi** does not convey any license under its patent rights nor the rights of others.

© Semiconductor Components Industries, LLC, 2008

**onsemi**, , and other names, marks, and brands are registered and/or common law trademarks of Semiconductor Components Industries, LLC dba "**onsemi**" or its affiliates and/or subsidiaries in the United States and/or other countries. **onsemi** owns the rights to a number of patents, trademarks, copyrights, trade secrets, and other intellectual property. A listing of **onsemi**'s product/patent coverage may be accessed at www.onsemi.com/site/pdf/Patent−Marking.pdf. **onsemi** reserves the right to make changes at any time to any products or information herein, without notice. The information herein is provided "as−is" and **onsemi** makes no warranty, representation or guarantee regarding the accuracy of the information, product features, availability, functionality, or suitability of its products for any particular purpose, nor does **onsemi** assume any liability arising out of the application or use of any product or circuit, and specifically disclaims any and all liability, including without limitation special, consequential or incidental damages. Buyer is responsible for its products and applications using **onsemi** products, including compliance with all laws, regulations and safety requirements or standards, regardless of any support or applications information provided by **onsemi**. "Typical" parameters which may be provided in **onsemi** data sheets and/or specifications can and do vary in different applications and actual performance may vary over time. All operating parameters, including "Typicals" must be validated for each customer application by customer's technical experts. **onsemi** does not convey any license under any of its intellectual property rights nor the rights of others. **onsemi** products are not designed, intended, or authorized for use as a critical component in life support systems or any FDA Class 3 medical devices or medical devices with a same or similar classification in a foreign jurisdiction or any devices intended for implantation in the human body. Should Buyer purchase or use **onsemi** products for any such unintended or unauthorized application, Buyer shall indemnify and hold **onsemi** and its officers, employees, subsidiaries, affiliates, and distributors harmless against all claims, costs, damages, and expenses, and reasonable attorney fees arising out of, directly or indirectly, any claim of personal injury or death associated with such unintended or unauthorized use, even if such claim alleges that **onsemi** was negligent regarding the design or manufacture of the part. **onsemi** is an Equal Opportunity/Affirmative Action Employer. This literature is subject to all applicable copyright laws and is not for resale in any manner.

## ADDITIONAL INFORMATION

**TECHNICAL PUBLICATIONS**:
**Technical Library:** www.onsemi.com/design/resources/technical−documentation
**onsemi Website:** www.onsemi.com

**ONLINE SUPPORT**: www.onsemi.com/support
**For additional information, please contact your local Sales Representative at** www.onsemi.com/support/sales