6-176146-6 ✔ ACTIVE

AMP | Econoseal

TE Internal #: 6-176146-6

Housing for Female Terminals, Wire-to-Wire, 2 Position, .311 in [7.9 mm] Centerline, Sealable, Gray, Signal, Cable Mount (Free-Hanging), Econoseal

View on TE.com >

Connectors > Automotive Connectors > Automotive Housings > ECONOSEAL, CONNECTOR HOUSING



Connector System: **Wire-to-Wire**

Number of Positions: **2**

Connector & Housing Type: **Housing for Female Terminals**

Centerline (Pitch): **7.9 mm [.311 in]**

Sealable: **Yes**

All ECONOSEAL, CONNECTOR HOUSING (89)

Features

Product Type Features

Mixed & Hybrid Connector	No
Connector Shape	Rectangular
Connector System	Wire-to-Wire
Connector & Housing Type	Housing for Female Terminals
Sealable	Yes
Primary Locking Feature	Integrated in Housing

Configuration Features

Number of Positions	2
Number of Rows	1

Electrical Characteristics

Operating Voltage	13 VDC
Nominal Voltage Architecture	12 V

Body Features

Cable Exit Angle	180°
Primary Product Color	Gray

Contact Features

Contact Size	4.8mm
Contact Type	Receptacle
Mating Tab Width	4.8 mm[.189 in]

Mechanical Attachment

Terminal Position Assurance	Yes
Strain Relief	Without
Mating Alignment Type	Polarization Slot
Mating Alignment	With
Connector Mounting Type	Cable Mount (Free-Hanging)

Housing Features

Housing Material	PBT
Centerline (Pitch)	7.9 mm[.311 in]

Dimensions

Connector Height	27.5 mm[1.083 in]
Product Width	27.6 mm[1.087 in]
Product Length	31.6 mm[1.244 in]

Usage Conditions

Operating Temperature (Max)	70 °C, 75 °C, 80 °C, 85 °C, 90 °C, 100 °C, 105 °C[158 °F][167 °F][176 °F][185 °F][194 °F][212 °F][221 °F]
Operating Temperature Range	-30 – 105 °C[-22 – 221 °F]

Operation/Application

Circuit Application	Signal

Industry Standards

UL Flammability Rating	UL 94V-2

Packaging Features

Packaging Quantity	50

Other

Serviceable	Yes
Connector Position Assurance Capable	No

Product Compliance

For compliance documentation, visit the product page on TE.com>

EU RoHS Directive 2011/65/EU	Compliant
EU ELV Directive 2000/53/EC	Compliant
China RoHS 2 Directive MIIT Order No 32, 2016	No Restricted Materials Above Threshold
EU REACH Regulation (EC) No. 1907/2006	Current ECHA Candidate List: JAN 2024 (240) Candidate List Declared Against: JAN 2024 (240) Does not contain REACH SVHC
Halogen Content	Not Low Halogen - contains Br or Cl > 900 ppm.
Solder Process Capability	Not applicable for solder process capability

Product Compliance Disclaimer

This information is provided based on reasonable inquiry of our suppliers and represents our current actual knowledge based on the information they provided. This information is subject to change. The part numbers that TE has identified as EU RoHS compliant have a maximum concentration of 0.1% by weight in homogenous materials for lead, hexavalent chromium, mercury, PBB, PBDE, DBP, BBP, DEHP, DIBP, and 0.01% for cadmium, or qualify for an exemption to these limits as defined in the Annexes of Directive 2011/65/EU (RoHS2). Finished electrical and electronic equipment products will be CE marked as required by Directive 2011/65/EU. Components may not be CE marked. Additionally, the part numbers that TE has identified as EU ELV compliant have a maximum concentration of 0.1% by weight in homogenous materials for lead, hexavalent chromium, and mercury, and 0.01% for cadmium, or qualify for an exemption to these limits as defined in the Annexes of Directive 2000/53/EC (ELV). Regarding the REACH Regulation, the information TE provides on SVHC in articles for this part number is based on the latest European Chemicals Agency (ECHA) 'Guidance on requirements for substances in articles' posted at this URL: https://echa.europa.eu/guidance-documents/guidance-on-reach

Compatible Parts



TE Part # 85024-1
RUBBER PLUG GRAY FOR 187 SEALD



TE Part # 6-176143-6
187 CAP HSG ASSY 2P LIGHT GRAY



TE Part # CAT-EC7491-T273
Econoseal Receptacles and Tabs

TE Part # 6-176147-6
.187 PLUG HSG 2P GRAY

Also in the Series | Econoseal

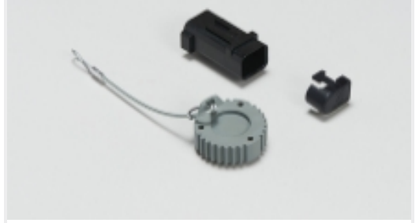

Automotive Connector Caps & Covers (1)

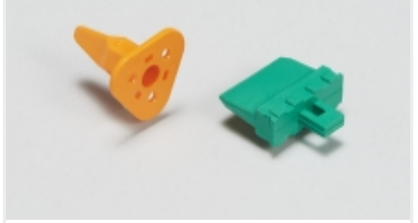

Automotive Connector Locks & Position Assurance(33)



Automotive Housings(102)

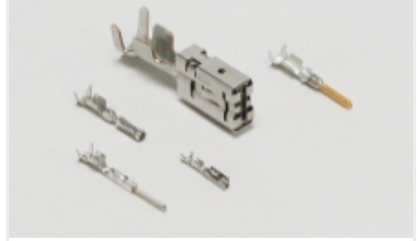

Automotive Terminals(43)



Connector Seals & Cavity Plugs(20)



Insertion & Extraction Tools(7)



Other Automotive Connector Accessories(6)

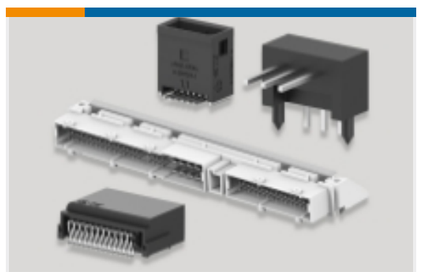

PCB Headers & Receptacles(3)



Primary Wire(1)

Customers Also Bought

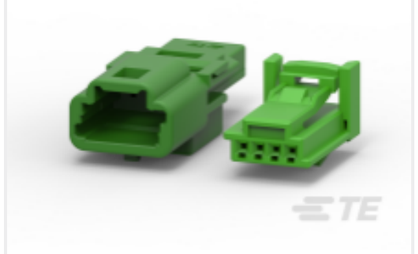

TE Part #1674312-2
TH/.025 CONNECTOR SYSTEM, HOUSING



TE Part #6-176143-6
ECONOSEAL, CONNECTOR HOUSING



TE Part #175091-1
.187 SEALD REC CONT L



TE Part #1-2282364-1
AMP MCP 2.8, CONTACT SWS LANCELESS



TE Part #1612281-1
SEALED 0.64/2.3II 126POS LEVER

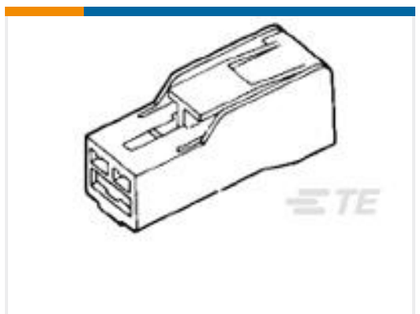

TE Part #172320-1
POSITIVE LOCK 250 (6.3 MM) HOUSING

Documents

Product Drawings

.187 PLUG HSG ASSY 2P GRAY

English

CAD Files

Customer View Model

ENG_CVM_6-176146-6_E.3d_igs.zip

English

Customer View Model

ENG_CVM_6-176146-6_E.3d_stp.zip

English

Customer View Model

ENG_CVM_6-176146-6_E.2d_dxf.zip

English

3D PDF

English

By downloading the CAD file I accept and agree to the Terms and Conditions of use.

Datasheets & Catalog Pages

Econoseal Connector Series

English

Product Specifications

Application Specification

English

Crimping of 187 Series, Waterproof Contact

English

Instruction Sheets

Instruction Sheet (non U.S.)

Japanese