# ESD-R-57SR-P

Aliases (UECESDR57SRP00)

KEMET, ESD-R-SR, EMI Cores, Noise Suppression

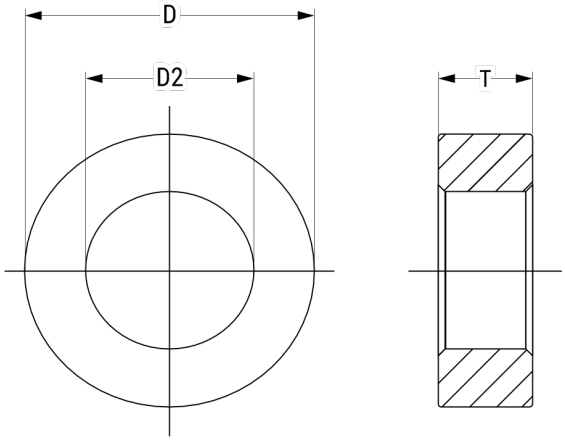


Click here for the 3D model.

| Dimensions | |
|---|---|
| D | 59mm MAX |
| D2 | 34mm MIN |
| T | 21mm MAX |

| Packaging Specifications | |
|---|---|
| Packaging | Tray, Box |
| Packaging Quantity | 60 |
| Typical Component Weight | 141.5 g |

| General Information | |
|---|---|
| Series | ESD-R-SR |
| Style | Round - Toroidal |
| Cable Type | Round Cable |
| Description | EMI Core Solid, Large-Size Ring Type, For Round Cables, Coated Type |
| Features | High Impedance, Effectively Suppresses Radiation at 150 kHz, Low Frequency Noise |
| RoHS | Yes |
| Qualifications | UL94 V-2 |
| Case Color | Gray |
| Materials | Mn-Zn |

| Specifications | |
|---|---|
| Temperature Range | -25/+85°C |
| Effective Frequency | 10 MHz (AM Band Range) |

Statements of suitability for certain applications are based on our knowledge of typical operating conditions for such applications, but are not intended to constitute - and we specifically disclaim - any warranty concerning suitability for a specific customer application or use. This Information is intended for use only by customers who have the requisite experience and capability to determine the correct products for their application. Any technical advice inferred from this Information or otherwise provided by us with reference to the use of our products is given gratis, and we assume no obligation or liability for the advice given or results obtained.



© 2006 - 2024 KEMET