1-1410773-2 × OBSOLETE

MULTIGIG RT

TE Internal #: 1-1410773-2

TE Internal Description: MULTIGIG RT BP GUIDE PIN 2.5 NI

View on TE.com >

Connectors > Connector Accessories > Connector Hardware


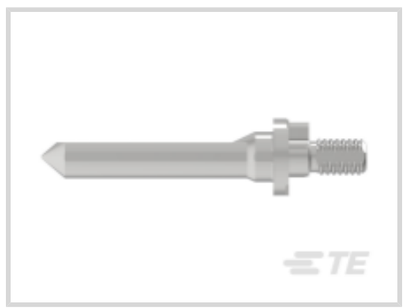




Hardware Accessory Function: **Guide Hardware**

Connector Hardware Accessory Type: **Guide Pin**

Primary Product Material: **Zinc Alloy**

Features

Product Type Features

Hardware Accessory Function	Guide Hardware
Connector Hardware Accessory Type	Guide Pin

Body Features

Primary Product Plating Material	Nickel
Product Orientation	Vertical
Primary Product Material	Zinc Alloy

Packaging Features

Packaging Method	Package
Packaging Quantity	1

Product Compliance

For compliance documentation, visit the product page on TE.com>

EU RoHS Directive 2011/65/EU	Compliant
EU ELV Directive 2000/53/EC	Compliant
China RoHS 2 Directive MIIT Order No 32, 2016	No Restricted Materials Above Threshold
EU REACH Regulation (EC) No. 1907/2006	Current ECHA Candidate List: JUNE 2025 (250)

	Candidate List Declared Against: JUNE 2024 (241) Does not contain REACH SVHC
Halogen Content	Low Halogen - Br, Cl, F < 900 ppm per homogenous material. Also BFR/CFR/PVC Free
Solder Process Capability	Not applicable for solder process capability

Product Compliance Disclaimer

This information is provided based on reasonable inquiry of our suppliers and represents our current actual knowledge based on the information they provided. This information is subject to change. The part numbers that TE has identified as EU RoHS compliant have a maximum concentration of 0.1% by weight in homogenous materials for lead, hexavalent chromium, mercury, PBB, PBDE, DBP, BBP, DEHP, DIBP, and 0.01% for cadmium, or qualify for an exemption to these limits as defined in the Annexes of Directive 2011/65/EU (RoHS2). Finished electrical and electronic equipment products will be CE marked as required by Directive 2011/65/EU. Components may not be CE marked. Additionally, the part numbers that TE has identified as EU ELV compliant have a maximum concentration of 0.1% by weight in homogenous materials for lead, hexavalent chromium, and mercury, and 0.01% for cadmium, or qualify for an exemption to these limits as defined in the Annexes of Directive 2000/53/EC (ELV). Regarding the REACH Regulation, the information TE provides on SVHC in articles for this part number is based on the latest European Chemicals Agency (ECHA) 'Guidance on requirements for substances in articles' posted at this URL: https://echa.europa.eu/guidance-documents/guidance-on-reach

Customers Also Bought

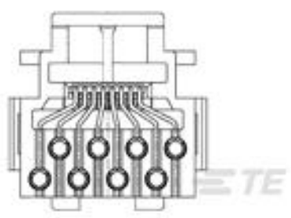

TE Part #216005-1
8P. TOOLLESS MOD J.

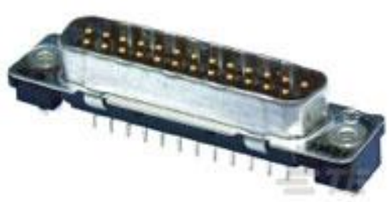

TE Part #3-338309-2
9POS.HD20 PLUG ASSY



TE Part #1410186-1
MULTIGIG RT T2 .8" BP H-LFT



TE Part #1410971-3
MULTIGIG RT T2 7RW H-LFT RTM



TE Part #1-1734248-5
1.0 FPC, ZIF V/T, SMT, 15P



TE Part #7-1879354-2
RR03 5% 300R AMMO



TE Part #2102735-1
BP, Half Left End, MULTIGIG RT 2R



TE Part #2102736-1
BP, Center, MULTIGIG RT 2R



TE Part #2102737-1
BP, Right End, MULTIGIG RT 2R

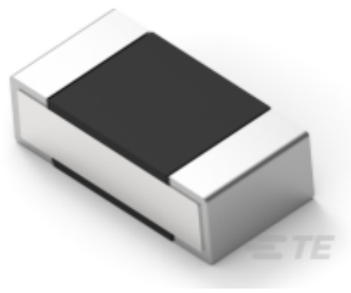

TE Part #8-2176306-9
RP 1E 0.1W 9K53 0.1% 25PPM 5K RL

Documents

CAD Files

3D PDF

3D

Customer View Model

ENG_CVM_CVM_1-1410773-2_A.2d_dxf.zip

English

Customer View Model

ENG_CVM_CVM_1-1410773-2_A.3d_igs.zip

English

Customer View Model

ENG_CVM_CVM_1-1410773-2_A.3d_stp.zip

English

By downloading the CAD file I accept and agree to the Terms and Conditions of use.

Datasheets & Catalog Pages

High Speed Backplane Connectors catalog - MULTIGIG RT Connector

English

High Speed Backplane Connectors catalog - Z-PACK HM-Zd Connector

English

POWER_CONNECTORS_CATALOG_SEC01_BOARD_TO_BOARD

English

Product Specifications

Application Specification

English