

SECTION "B-B"

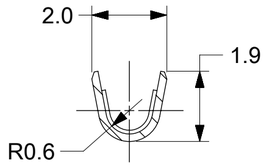

SECTION "C-C"

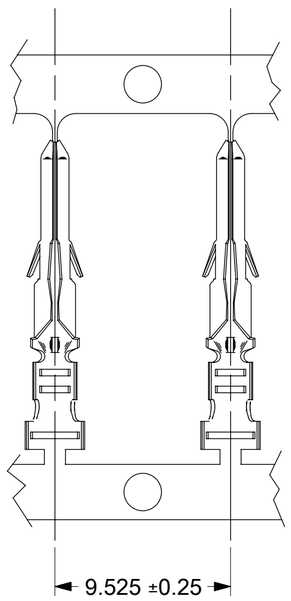

CHAIN FORM
SCALE: 4:1

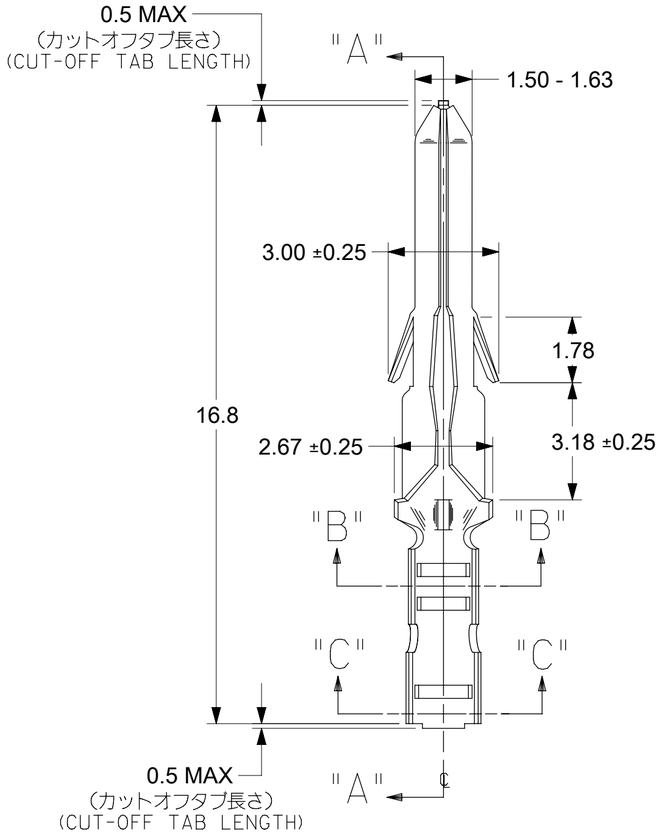

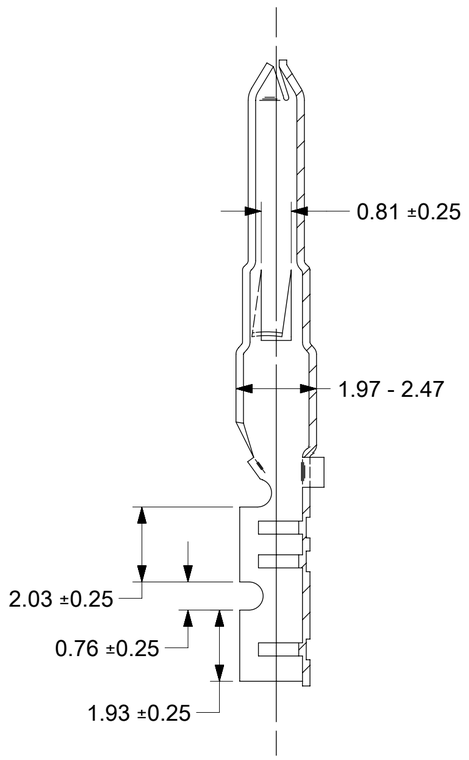

SECTION "A-A"

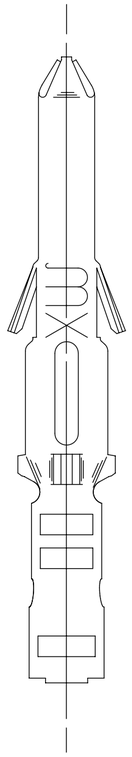

NOTES:

1. MATERIAL: BRASS
2. FINISHES: SEE CHART
3. PRODUCT SPECIFICATION: PS-02-0-6
4. PACKAGE INFORMATION: CHAIN: 18540000-PK
   CHAIN WITH INTERLEAF: 18540001-PK
5. TERMINAL FOR USE WITH (1.57)/.062 DIA. SERIES HOUSINGS AND WILL ACCEPT 22 THRU 28 AWG WIRE WITH 1.1-1.5 INSULATION DIAMETER.
6. PARTS CONFORM TO CLASS B REQUIREMENTS OF COSMETIC SPECIFICATION PS-45499-002.

一般公差：±0.4
GENERAL TOLERANCES: ±0.4

PLATING	EDP. NO.	ENG. NO.	FORM
0.9 µm MIN. TIN OVER 0.5 µm MIN. COPPER	46999-0999	1854T1	CHAIN WITH INTERLEAF
	39-00-0280	1854T	CHAIN

THIS DRAWING CONTAINS INFORMATION THAT IS PROPRIETARY TO MOLEX ELECTRONIC TECHNOLOGIES, LLC AND SHOULD NOT BE USED WITHOUT WRITTEN PERMISSION

DIMENSION UNITS	mm
SCALE	8:1
GENERAL TOLERANCES (UNLESS SPECIFIED)	
ANGULAR TOL ± °	
4 PLACES ±	
3 PLACES ±	
2 PLACES ±	
1 PLACE ±	
0 PLACES ±	
DRAFT WHERE APPLICABLE MUST REMAIN WITHIN DIMENSIONS	

CURRENT REV DESC: ADD 46999-0999

EC NO: 742179
DRWN: MKIPPER 2023/03/01
CHK'D: MKIPPER 2023/03/13
APPR: FSMITH 2023/03/13

INITIAL REVISION:
DRWN: MKIPPER 2019/03/07
APPR: FSMITH 2020/06/05

molex

CRIMP TERMINAL, MALE
.062 DIA. FOR 24-30 AWG WIRE

PRODUCT CUSTOMER DRAWING

材料 MATERIAL	黄銅 BRASS 0.2 t
仕上げ FINISH	〃
適用電線範囲 WIRE RANGE	AWG#22-#28
被覆外径 INS. RANGE	∅ 1.1~1.5

THIRD ANGLE PROJECTION	DRAWING	SERIES
	C-SIZE	1854

DOCUMENT NUMBER	DOC TYPE	DOC PART	REVISION
18540001-SD	PSD	000	A2

MATERIAL NUMBER	CUSTOMER	SHEET NUMBER
SEE TABLE	GENERAL MARKET	1 OF 1

DOCUMENT STATUS	P1	RELEASE DATE	2023/03/13 23:35:26

FORMAT: master-tb-prod-C
REVISION: J1
DATE: 2021/05/01