Data sheet

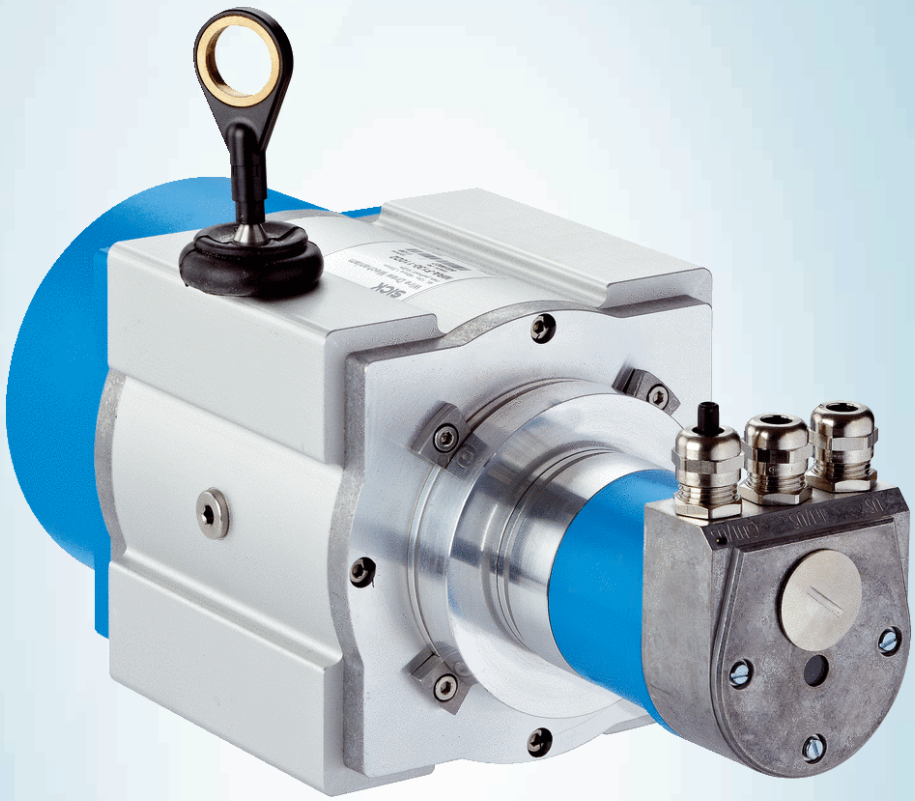

BTF13-D1HM1025

HighLine

WIRE DRAW ENCODERS

SICK
Sensor Intelligence.

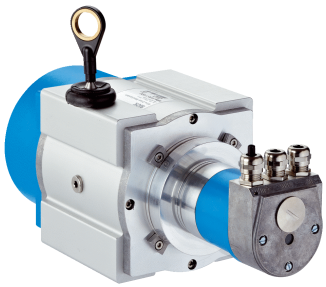

Ordering information

Type	part no.
BTF13-D1HM1025	1034313

Included in delivery: ATM60-D1H13x13 (1), MRA-F130-110D2 (1)

Other models and accessories → www.sick.com/HighLine

Detailed technical data

Safety-related parameters

$MTTF_D$ (mean time to dangerous failure)	150 years (EN ISO 13849-1) [1]

[1] This product is a standard product and does not constitute a safety component as defined in the Machinery Directive. Calculation based on nominal load of components, average ambient temperature 40 °C, frequency of use 8760 h/a. All electronic failures are considered hazardous. For more information, see document no. 8015532.

Performance

Measurement range	0 m ... 10 m
Encoder	Absolute encoders
Resolution (wire draw + encoder)	0.04 mm [1] [2]
Repeatability	≤ 1.5 mm [3]
Linearity	≤ ± 2 mm [3]
Hysteresis	≤ 3 mm [3]

[1] The values shown have been rounded.
[2] Example calculation based on the BTF08 with PROFINET: 200 mm (wire draw length per revolution - see Mechanical data): 262,144 (number of steps per revolution) = 0.001 mm (resolution of wire draw + encoder combination).
[3] Value applies to wire draw mechanism.

Interfaces

Communication interface	DeviceNet™
Programmable/configurable	✓

Electronics

Connection type	Bus adapter for DeviceNet [1]
Supply voltage	10 V ... 32 V
Power consumption	≤ 2 W (without load)

[1] Order bus adapter separately.

Mechanics

Weight	4.09 kg
Measuring wire material	Highly flexible stranded steel 1,4401 stainless steel V4A

[1] These values were measred at an ambient temperature of 25 °C. There may be variations at other temperatures.
[2] Average values, which depend on the application.
[3] The service life depends on the type of load. This is influenced by environmental conditions, the installation location, the measuring range in use, the traversing speed, and acceleration.

Measuring wire diameter	1.35 mm
Weight (measuring wire)	7.1 g/m
Housing material, wire draw mechanism	Aluminum (anodised), plastic
Spring return force	10 N ... 20 N [1]
Length of wire pulled out per revolution	332.4 mm
Life of wire draw mechanism	Typ. 1,000,000 cycles [2] [3]
Actual wire draw length	10.2 m
Wire acceleration	40 m/s²
Operating speed	8 m/s
Mounted encoder	ATM60 DeviceNet, ATM60-D1H13X13, 1030018
Mounted mechanic	MRA-F130-110D2, 6028627

[1] These values were measred at an ambient temperature of 25 °C. There may be variations at other temperatures.

[2] Average values, which depend on the application.

[3] The service life depends on the type of load. This is influenced by environmental conditions, the installation location, the measuring range in use, the traversing speed, and acceleration.

Ambient data

EMC	According to EN 61000-6-2 and EN 61000-6-3
Enclosure rating	IP64, mounted mechanic
Operating temperature range	–20 °C ... +70 °C

Classifications

ECLASS 5.0	27270590
ECLASS 5.1.4	27270590
ECLASS 6.0	27270590
ECLASS 6.2	27270590
ECLASS 7.0	27270590
ECLASS 8.0	27270590
ECLASS 8.1	27270590
ECLASS 9.0	27270590
ECLASS 10.0	27270613
ECLASS 11.0	27270503
ECLASS 12.0	27270503
ETIM 5.0	EC001486
ETIM 6.0	EC001486
ETIM 7.0	EC001486
ETIM 8.0	EC001486
UNSPSC 16.0901	41112113

Dimensional drawing

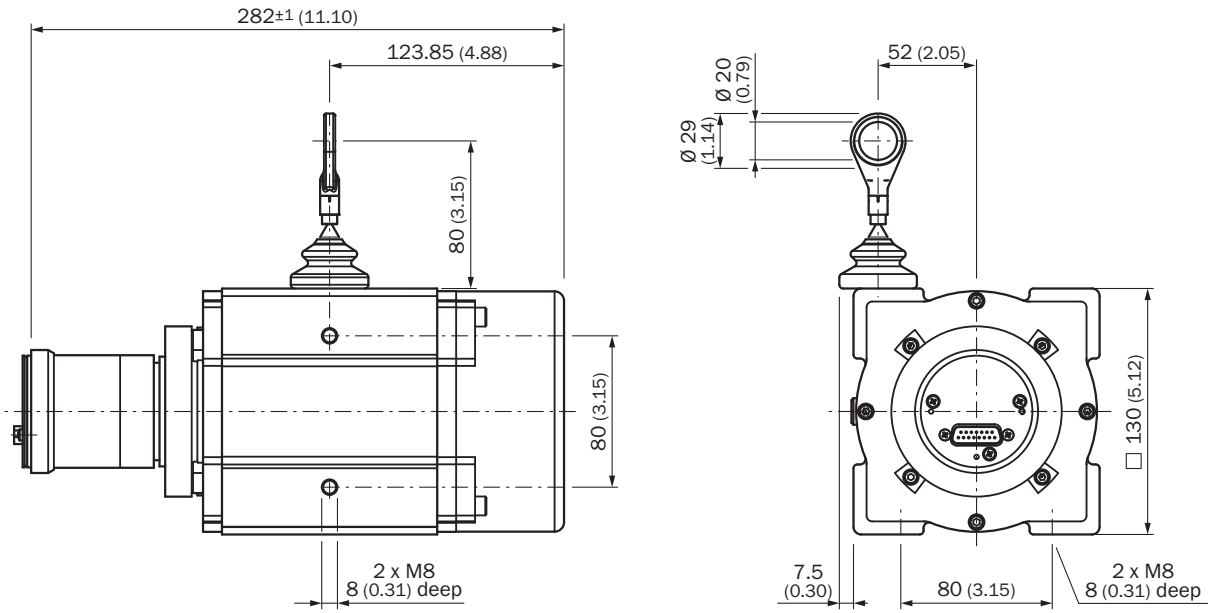

Dimensions in mm (inch)

PIN assignment

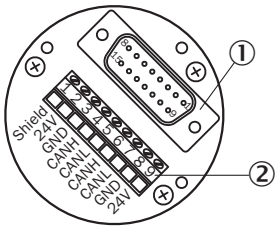

① Internal plug connector to encoder
② external connection to the bus

Terminal strip	Male device connector	Signal	Explanation
1	1	shield	Screen
2	2	U_S (24 V)	Operating voltage 10 ... 32 V
3	3	GND (COM)	0 V (GND)
4	4	CAN_H	CAN Bus Signal high
5	5	CAN_L	CAN Bus Signal low
6	-	CAN_H	CAN Bus Signal high
7	-	CAN_L	CAN Bus Signal low
8	-	GND (COM)	0 V (GND)
9	-	U_S (24 V)	Operating voltage 10 ... 32 V

Recommended accessories

Other models and accessories ➜ www.sick.com/HighLine

	Brief description	Type	part no.
Mounting systems			
	• **Description:** Joint ball for later insertion in wire end ring with 20 mm diameter. The use of this joint ball enables movement in multiple levels of freedom.	Joint protection for wire rope BTF/PRF/MRA	5318683
	• **Description:** Compressed air attachment for MRA-F080... and MRA-F130... HighLine wire draw mechanism	MRA-F-P	6073769
	• **Description:** Flange adapter for HighLine wire draw mechanisms, adaption of face mount flange with centering hub 20 mm to 50 mm servo flange • **Material:** Aluminum • **Details:** Aluminum • **Items supplied:** Including 3 countersunk screws M3 x 10	BEF-FA-020-050WDE	2073776
	• **Description:** Additional brush attachment for wire draw mechanism MRA-F130 (5 m, 10 m, 20 m and 30 m from HighLine series)	MRA-F130-B	6038562
	• **Description:** Wire draw deflection pulley for wire draw mechanism MRA-F130 (5m, 10m, 20m and 30m from HighLine series)	MRA-F130-R	6028631
connectors and cables			
	• **Connection type head A:** Female connector, M12, 5-pin, straight, A-coded • **Connection type head B:** Male connector, M12, 5-pin, straight, A-coded • **Signal type:** Fieldbus, CANopen, DeviceNet™ • **Cable:** 6 m, 5-wire, PUR, halogen-free • **Description:** Fieldbus, unshieldedCANopenDeviceNet™	DSL-1205-G06MK	6028327
	• **Connection type head A:** Flying leads • **Connection type head B:** Flying leads • **Signal type:** CANopen, DeviceNet™ • **Items supplied:** By the meter • **Cable:** 4-wire, twisted pair • **Description:** CANopen, shieldedDeviceNet™ • **Note:** Wire shield Al-Pt film, overall shield C-screen tin-plated	LTG-2804-MW	6028328
	• **Connection type head A:** Female connector, M12, 5-pin, straight, A-coded • **Signal type:** CANopen, DeviceNet™ • **Description:** CANopen, shieldedDeviceNet™ • **Connection systems:** Screw-type terminals • **Permitted cross-section:** ≤ 0.75 mm²	DOS-1205-GA	6027534
	• **Connection type head A:** Male connector, M12, 5-pin, straight, A-coded • **Signal type:** CANopen, DeviceNet™ • **Description:** CANopen, shieldedDeviceNet™ • **Connection systems:** Screw-type terminals • **Permitted cross-section:** ≤ 0.75 mm²	STE-1205-GA	6027533

	Brief description	Type	part no.
integration modules and adapters			
		AD-ATM60-KR1DN	2029228
		AD-ATM60-KR2DN	2029229
		AD-ATM60-SR1DN	2029226
		AD-ATM60-SR2DN	2029227
Wire draw mechanism			
	• **Product segment:** Wire draw mechanism • **Product family:** Wire draw mechanism for wire draw encoders • **Description:** HighLine wire draw mechanism for servo flange with 6 mm shaft, measuring range 0 m ... 10 m • **Items supplied:** Without encoder	MRA-F130-110D2	6028627

SICK AT A GLANCE

SICK is one of the leading manufacturers of intelligent sensors and sensor solutions for industrial applications. A unique range of products and services creates the perfect basis for controlling processes securely and efficiently, protecting individuals from accidents and preventing damage to the environment.

We have extensive experience in a wide range of industries and understand their processes and requirements. With intelligent sensors, we can deliver exactly what our customers need. In application centers in Europe, Asia and North America, system solutions are tested and optimized in accordance with customer specifications. All this makes us a reliable supplier and development partner.

Comprehensive services complete our offering: SICK LifeTime Services provide support throughout the machine life cycle and ensure safety and productivity.

For us, that is “Sensor Intelligence.”

WORLDWIDE PRESENCE:

Contacts and other locations –www.sick.com