Product Specifications

FERROXCUBE

Description	**UR64/40/20-D-3C90**		
Code 12NC	4327 018 xxxxx	Selling unit	PCS
YPN		Marking	

A-A (1 : 1)

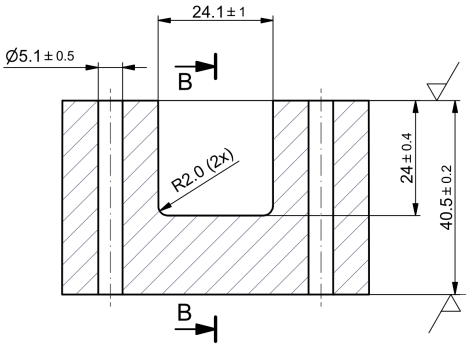

B-B (1 : 1)

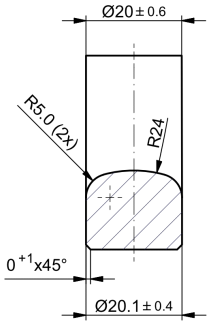

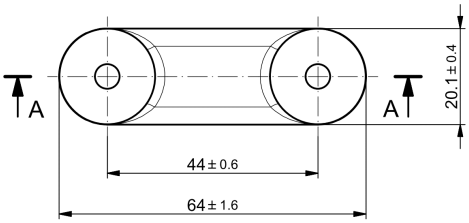

(1 : 1)

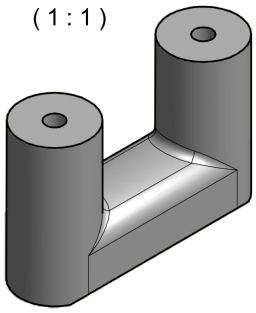

Magnetic dimensions according to IEC 205				
Ae = 305 [mm²]	Amin = 297 [mm²]	Le = 200 [mm]	Ve = 61000 [mm³]	C1 = 0.656 [mm⁻¹]

Specified value

No	Symbol	Unit	Value	Conditions	Remarks
1	Al.	nH/turns²	4000 ± 25%	10 kHz; < 0.1 mT; 25°C	
2	Pv	W/set	< 7.32	25 kHz; 200 mT; 100°C	
3	Bsat	mT	> 320	10 kHz; 250 A/m; 100°C	
4					
5					
6					
7					
8					
9					
10					

Comments

Compiles with		Prepared	Bartosz Śledź	Date / Approved	Status
CE	RoHS 2011/65/EU	Date	2025-02-12		PROVISIONAL
		Version	1		
		Product type			
		STANDARD			

© PROPERTY OF FERROXCUBE POLSKA, SKIERNIEWICE