SCF25XV-220-1R9A007JV

Aliases (UALCF250007JV0)

KEMET, SC25XV, AC Line Filters, Common Mode, 1.2 mH

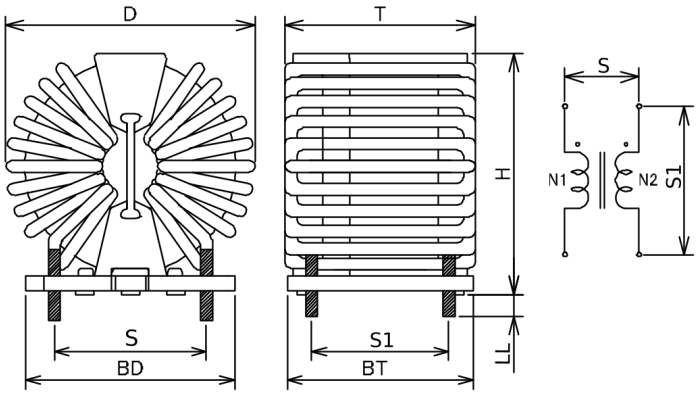

Click here for the 3D model.

Dimensions	
D	37.5mm MAX
T	26mm MAX
H	32.5mm +1/-0.6mm
LL	3.5mm +/-0.5mm
S	20.5mm +/-0.5mm
S1	18.5mm +/-0.5mm
Wire Size	1.9mm
BD	28.2mm +/-0.5mm
BT	25.50mm +/-0.5mm

Packaging Specifications	
Packaging	Tray
Packaging Quantity	140
Typical Component Weight	50.5 g

General Information	
Series	SC25XV
Style	Through-Hole
Features	High Rated Voltage
RoHS	Yes
Qualifications	AEC-Q200
Notes	Lead Spacing (S/S1) Are For Reference Only.
Miscellaneous	Temperature Rise Maximum: 50 K.
Core	Nanocrystal

Specifications	
Voltage AC	1000 VAC
Voltage DC	1000 VDC
Inductance	1.2 mH
Current	22 A
Temperature Range	-40/+150°C
DC Resistance	2.35 mOhms

Statements of suitability for certain applications are based on our knowledge of typical operating conditions for such applications, but are not intended to constitute - and we specifically disclaim - any warranty concerning suitability for a specific customer application or use. This Information is intended for use only by customers who have the requisite experience and capability to determine the correct products for their application. Any technical advice inferred from this Information or otherwise provided by us with reference to the use of our products is given gratis, and we assume no obligation or liability for the advice given or results obtained.

© 2006 - 2024 KEMET