EEM-MA370-24DC - Measuring device

1127059

https://www.phoenixcontact.com/us/products/1127059

Please be informed that the data shown in this PDF document is generated from our online catalog. Please find the complete data in the user documentation. Our general terms of use for downloads are valid.



Multi-functional energy measuring device with 24 V DC supply and integrated Modbus/TCP interface for measuring electrical parameters in low-voltage installations up to 690 V (phoenixcontact.com/empro-help)

Commercial data

Item number	1127059
Packing unit	1 pc
Minimum order quantity	1 pc
Sales key	C446
Product key	CMMC21
GTIN	4063151055240
Weight per piece (including packing)	311.4 g
Weight per piece (excluding packing)	310 g
Customs tariff number	90303100
Country of origin	DE

Technical data

Product properties

Product type	Energy measuring device
Product family	EMpro
Number (Ethernet ports)	1

Display

Display type	LCD display, backlit, 2-color, multi-line

Electrical properties

Maximum power dissipation for nominal condition	10 VA
Mains type	3-phase (3 or 4-conductor), 2-phase (2-conductor), and single-phase (1-conductor)

Electrical isolation

Test voltage	4 kV AC (50 Hz, 60 s)
Pollution degree	2
Insulation	Reinforced insulation

Electrical isolation Housing against all potentials IEC 61010-1

Standards/regulations	IEC 61010-1
Overvoltage category	III (300 V AC)
	II (600 V AC)
Insulation	Reinforced insulation

Electrical isolation Supply voltage

Insulation	Functional insulation

Electrical isolation Voltage measurement input against all other potentials IEC 61010-2-030

Standards/regulations	IEC 61010-2-030
Measuring category	III (300 V AC)
	II (600 V AC)
Insulation	Reinforced insulation

Electrical isolation Current measurement input against all other potentials

Insulation	Functional insulation

Electrical isolation Digital I/Os

Insulation	Functional insulation

Electrical isolation Communication interface

Insulation	Functional insulation

Supply

Supply voltage	24 V DC ±25 %
Supply voltage range	18 V DC ... 30 V DC
Power consumption	< 4 W

Input data

General

Measuring principle	True r.m.s. value measurement
Measured value	AC sine (50 Hz/60 Hz)
Acquisition of harmonics	up to 63rd harmonic
Description of the input	Digital input in accordance with IEC/EN 61131-2 (type 3)
Number	1
Voltage input signal	24 V DC
	0 V DC ... 30 V DC
Current input signal	2 mA ... 15 mA
Protection	250 mA (fast-blow)
Protective circuit	Protection against incorrect DC connection (max. 30 V)

Measurement: Voltage

Input name	Voltage measuring input V1, V2, V3
Input voltage range direct	35 V AC ... 690 V AC (Phase/Phase)
	20 V AC ... 400 V AC (Phase/neutral conductor)
Input voltage range via external transformers	60 V AC ... 2000000 V AC (primary)
	60 V AC ... 400 V AC (secondary)
Surge voltage capacity	760 V AC (Phase/Phase)
Precision	0.2 %
Power consumption	< 0.5 VA

Measurement: Current

Input name	Current measurement I1, I2, I3
Input current	1 A (secondary)
	5 A (secondary)
Measuring range	1 A ... 20000 A (primary)
Overload capacity	6 A (I_{max})
Response threshold from measuring range nominal value	10 mA (1 A)
	50 mA (5 A)
Precision	0.2 %
Current overload	50 A for 1 s
	20 A (4 x I_N, continuous)
Power consumption	< 0.5 VA

Measurement: Power

Precision	0.5 %
Active energy (IEC 62053-22)	Class 0.5 S
Reactive power (IEC 62053-23)	Class 2
ANSI C12.20	Class 0.5 S

Output data

Output description	Digital output in accordance with IEC/EN 61131-2 (type 3)

Number	1
Current output signal	≤ 100 mA
Voltage output signal	24 V DC
Protection	250 mA (fast-blow)
Protective circuit	Protection against incorrect DC connection (max. 30 V)

Connection data

Current / voltage / supply

Connection method	Screw connection
Stripping length	8 mm
Screw thread	M3
Conductor cross-section rigid	0.2 mm² ... 6 mm²
Conductor cross-section flexible	0.2 mm² ... 4 mm²
Conductor cross-section AWG	24 ... 10
Tightening torque	0.5 Nm ... 0.6 Nm

Digital I/O / communication

Connection method	Screw connection
Stripping length	7 mm
Screw thread	M3
Conductor cross-section rigid	0.14 mm² ... 2.5 mm²
Conductor cross-section flexible	0.14 mm² ... 1.5 mm²
Conductor cross-section AWG	26 ... 14
Tightening torque	0.5 Nm ... 0.6 Nm

Interfaces

Data: Network interface

Communication protocol	Modbus/TCP
	REST
Connection method	RJ45

Dimensions

Item dimensions

Width	90 mm
Height	90 mm
Depth	71.9 mm
Horizontal pitch	5 Div.

Material specifications

Color	gray (RAL 7042)

Environmental and real-life conditions

Ambient conditions

Degree of protection (Housing)	IP20 (Housing)
Degree of protection (Display)	IP40 (Display)
Ambient temperature (operation)	-25 °C ... 70 °C
Ambient temperature (storage/transport)	-30 °C ... 80 °C
Altitude	≤ 2000 m
Max. permissible relative humidity (operation)	≤ 95 % (non-condensing)

Approvals

CE

Certificate	CE-compliant

UKCA

Certificate	UKCA-compliant

UL, USA/Canada

Identification	UL/C-UL Listed UL 61010-1

UL data

Operating mode	Indoor use

Standards and regulations

Standards/regulations	IEC 61010-1
	IEC 61326-1
	IEC 61557-12

Mounting

Mounting type	DIN rail mounting
Mounting position	Horizontal DIN rail

Drawings

Connection diagram

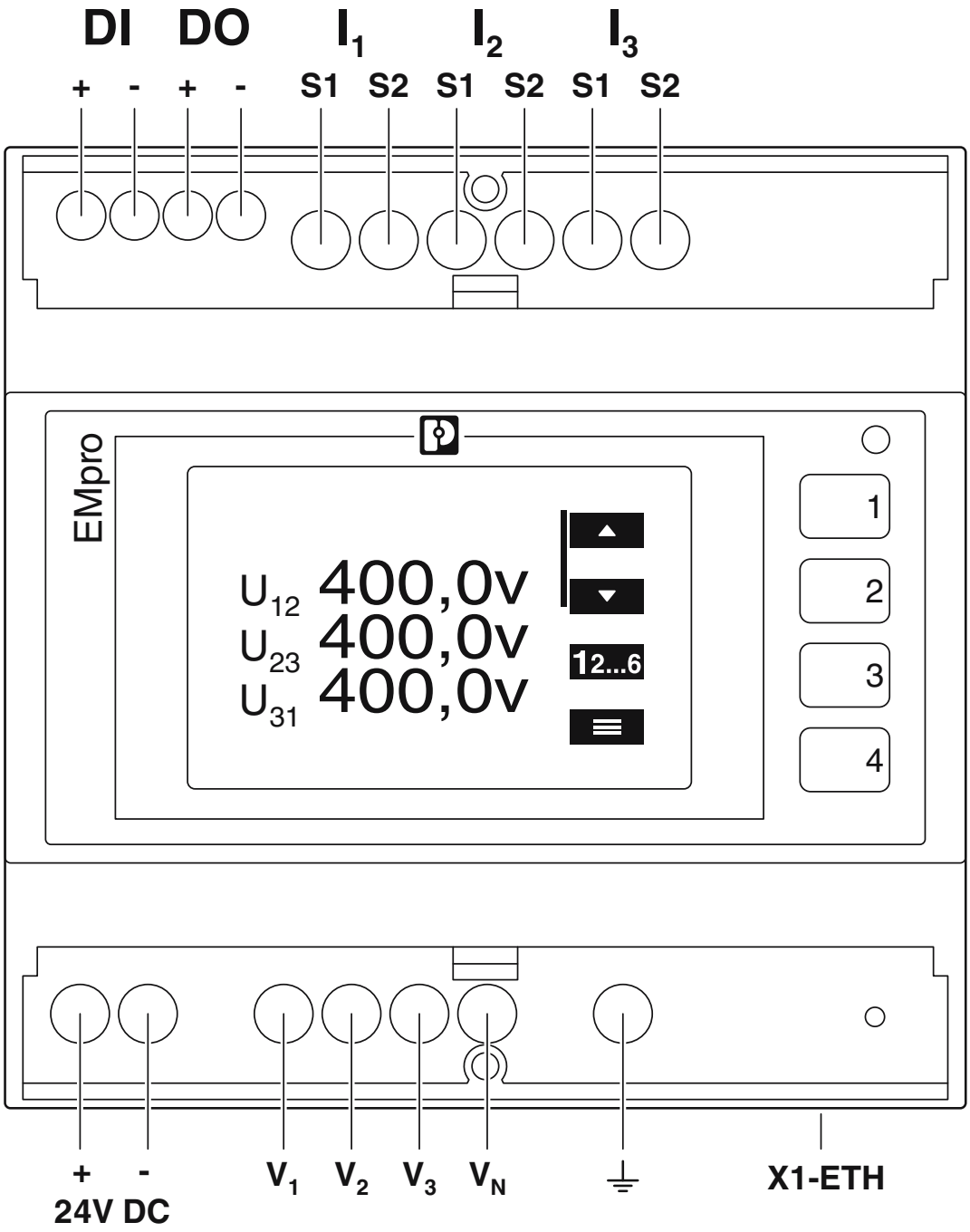

Connection assignment

Connection diagram

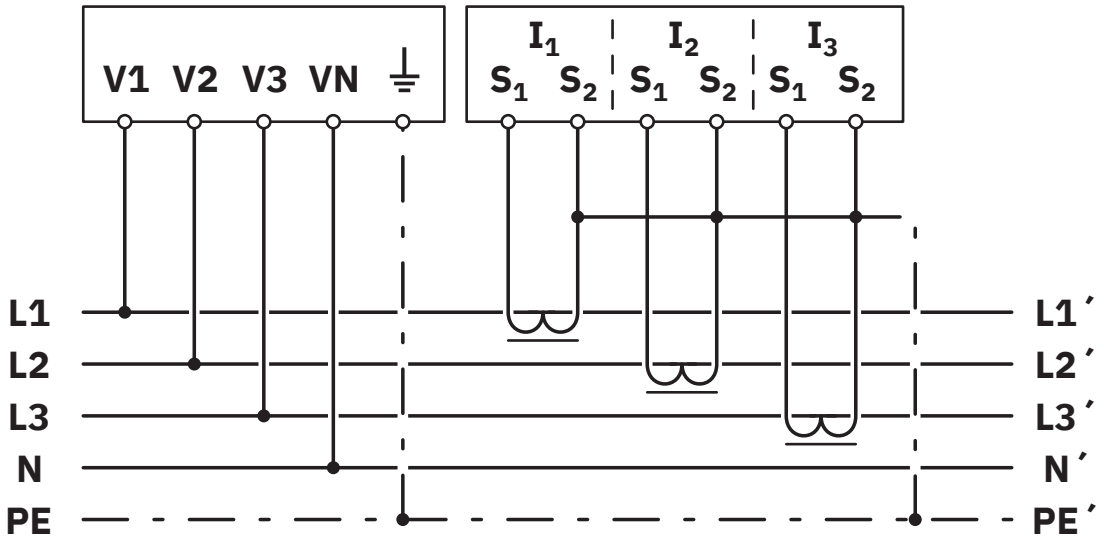

Network type: 3PH-4W-3CT

Connection diagram

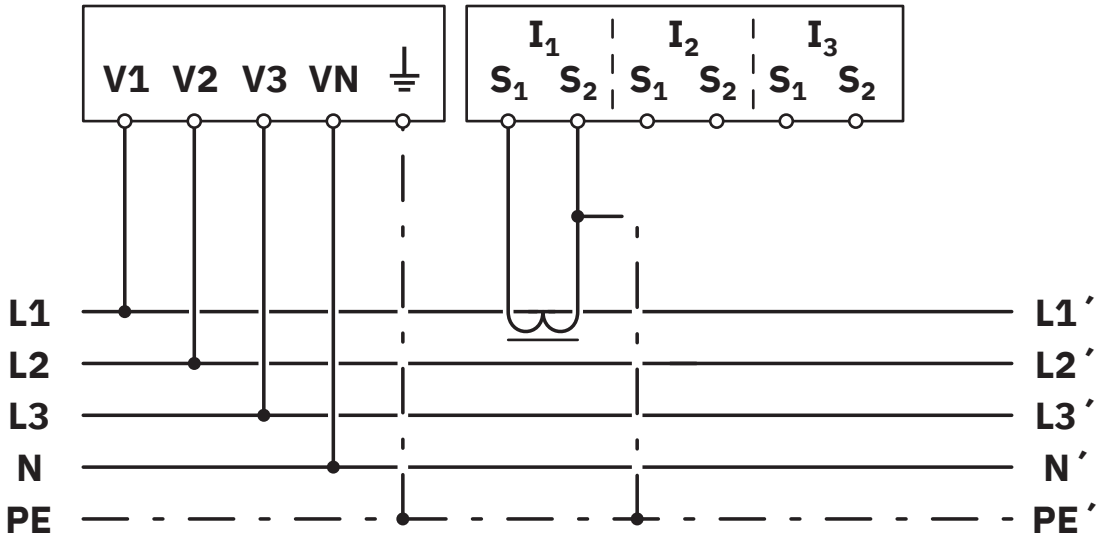

Network type: 3PH-4W-1CT

Connection diagram

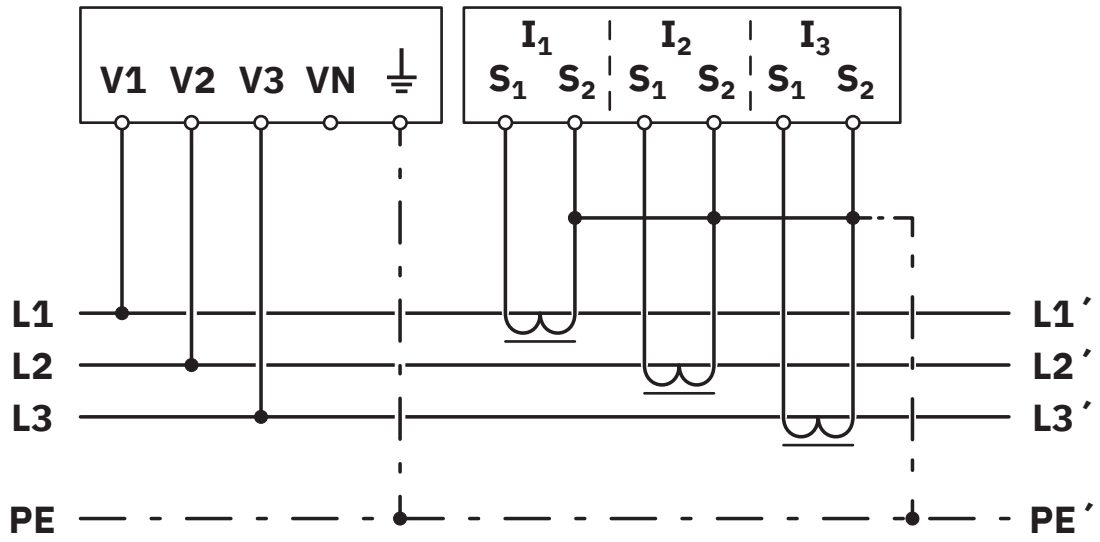

Network type: 3PH-3W-3CT

Connection diagram

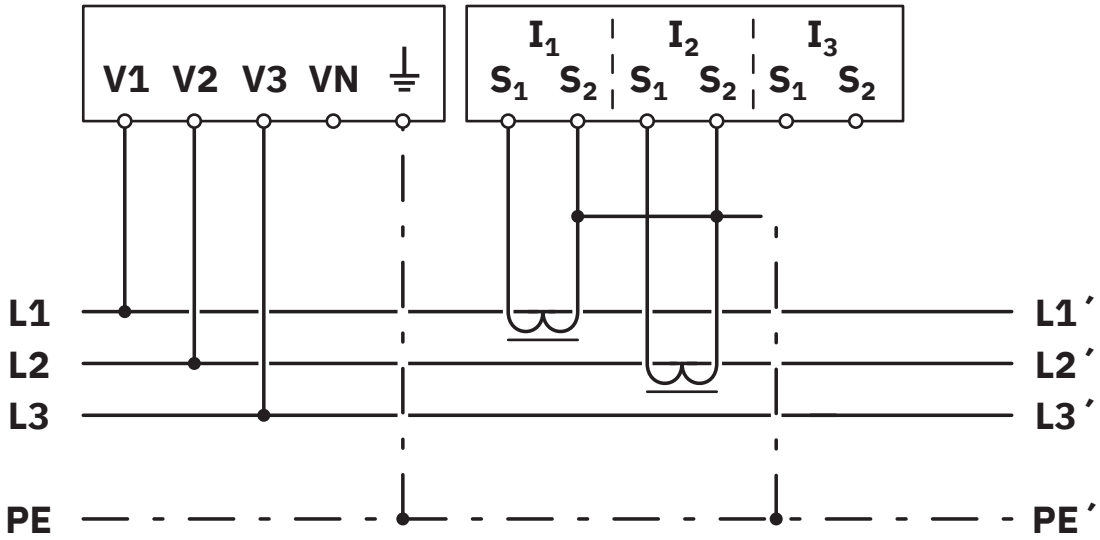

Network type: 3PH-3W-2CT

Connection diagram

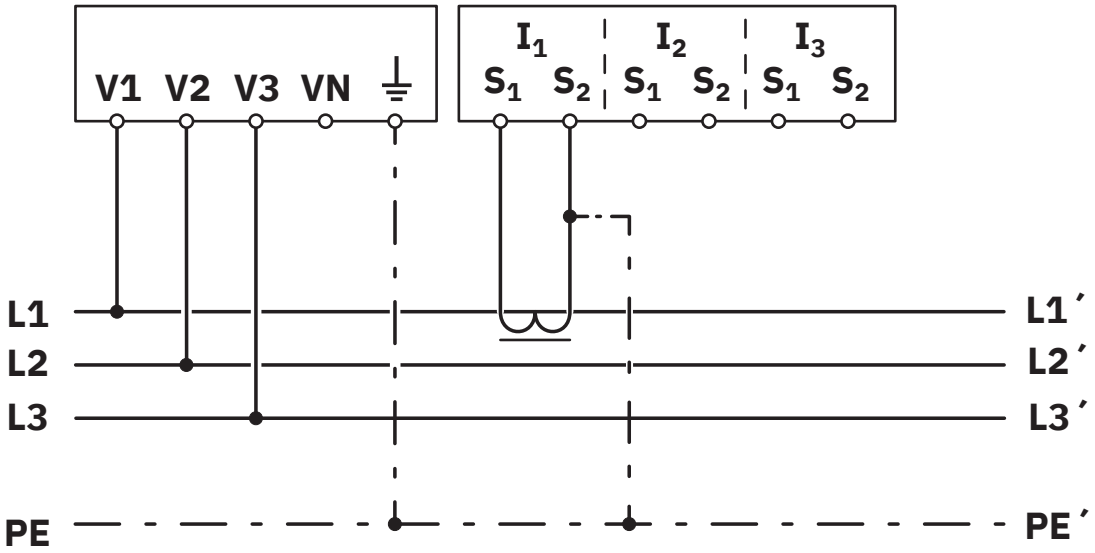

Network type: 3PH-3W-1CT

Connection diagram

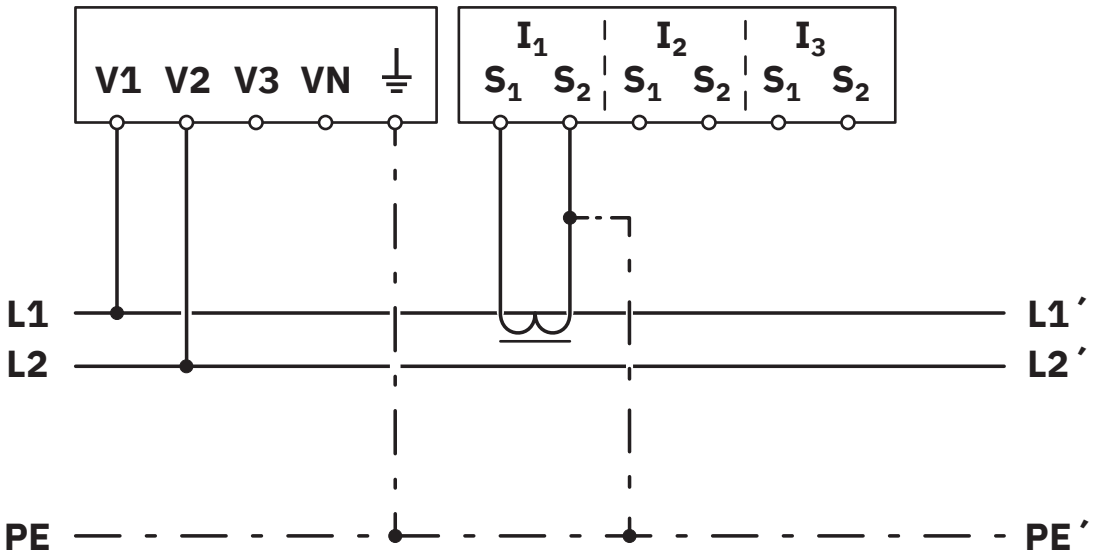

Network type: 2PH-2W-1CT

Connection diagram

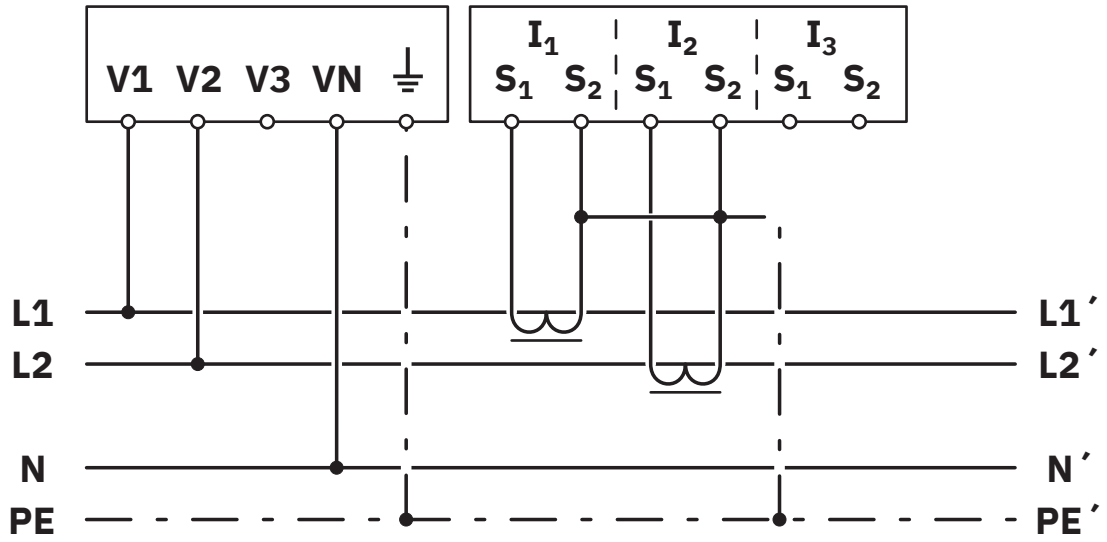

Network type: 2PH-3W-2CT

Connection diagram

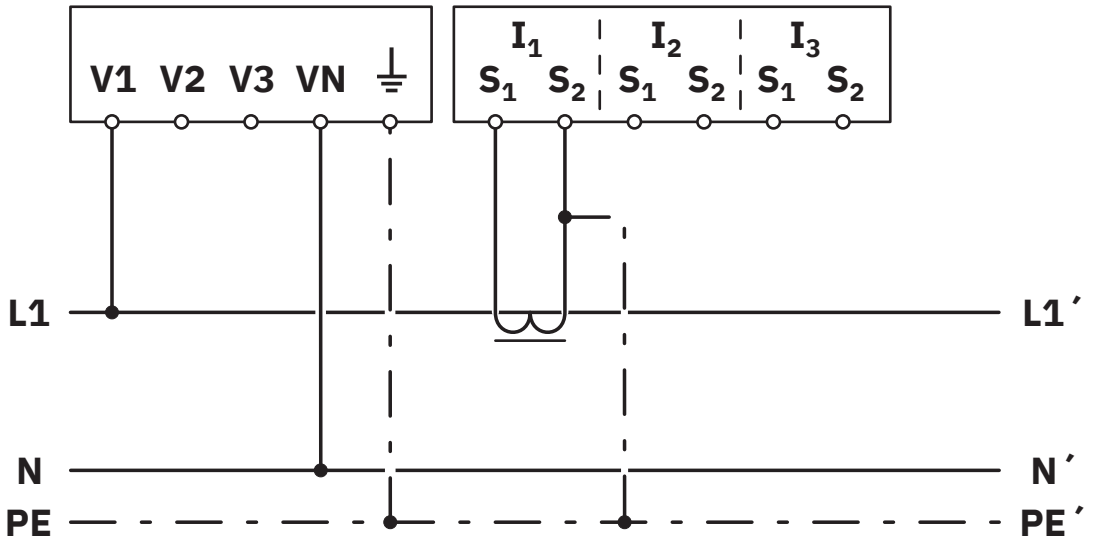

Network type: 1PH-2W-1CT

Schematic diagram

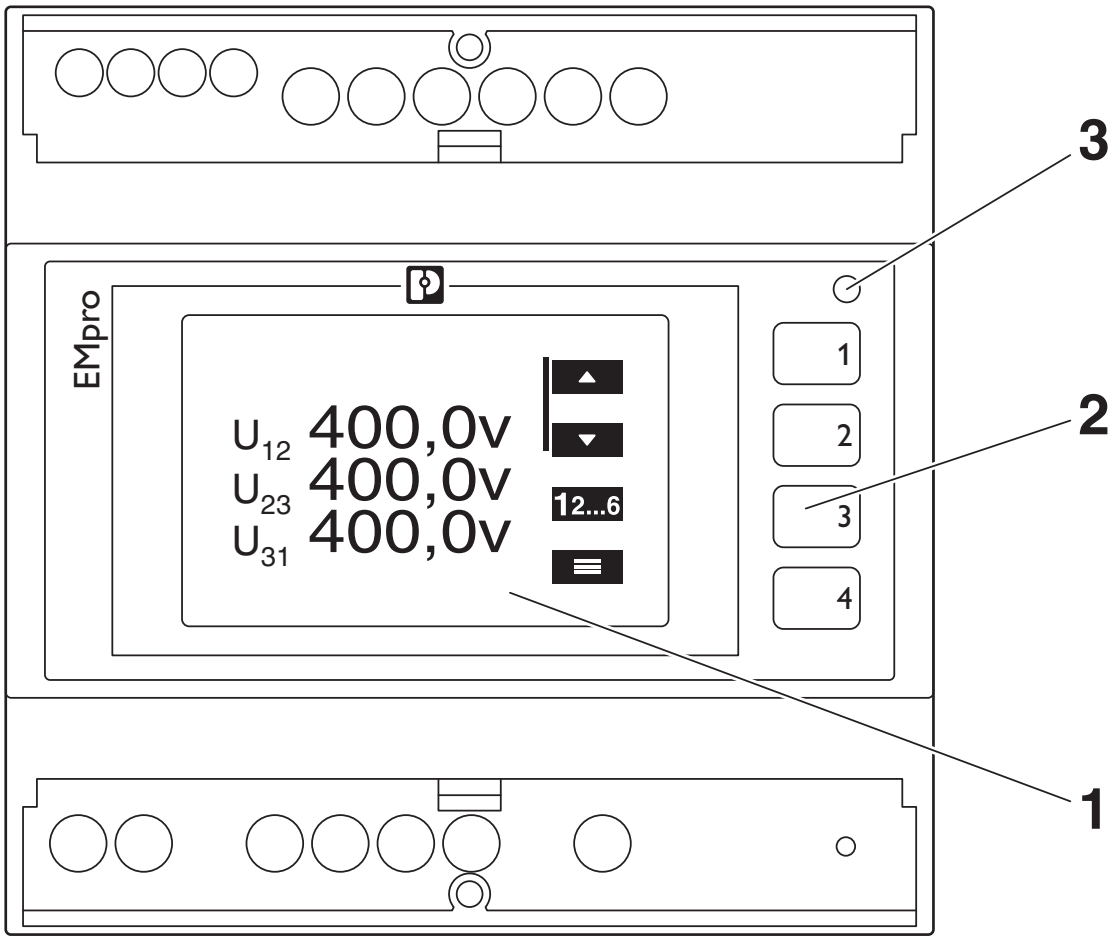

Operating and indication elements
1 LCD, backlit
2 Operating buttons for displaying measured values and for changing the configuration
3 Pulse LED

Schematic diagram

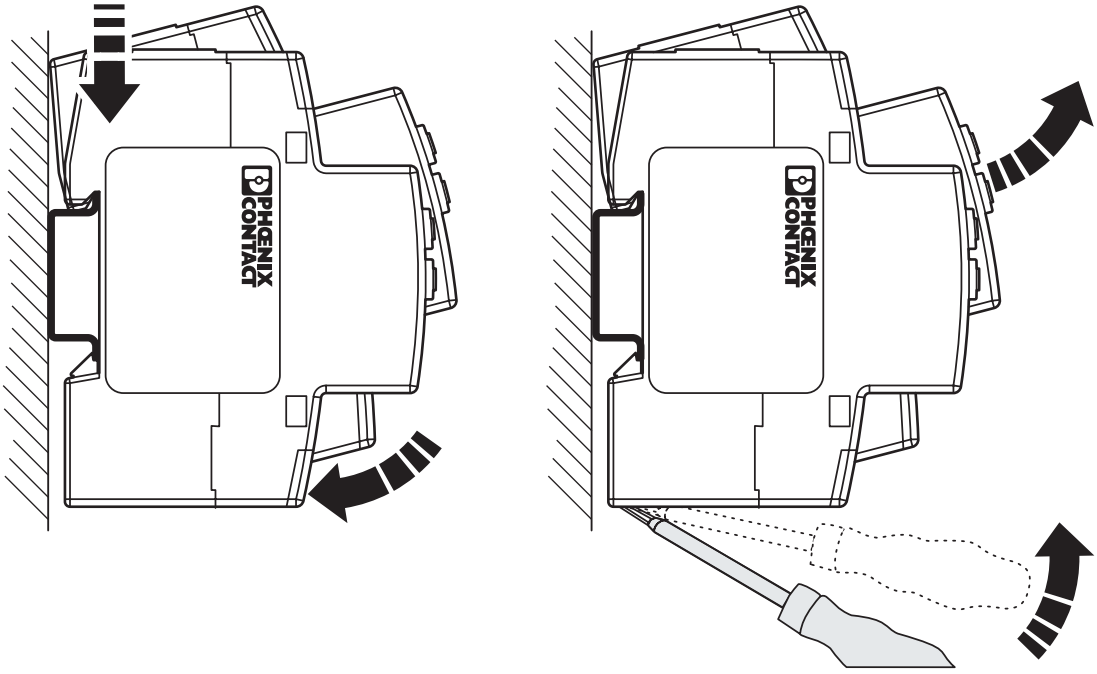

Mounting

Approvals

To download certificates, visit the product detail page: https://www.phoenixcontact.com/us/products/1127059

UL Listed
Approval ID: E357804

cUL Listed
Approval ID: E357804

cULus Listed
Approval ID: E357804

Classifications

ECLASS

ECLASS-13.0	27142330
ECLASS-15.0	27142330

ETIM

ETIM 9.0	EC002301

UNSPSC

UNSPSC 21.0	41113600

Environmental product compliance

EU RoHS

Fulfills EU RoHS substance requirements	Yes
Exemption	7(a), 7(c)-I

China RoHS

Environment friendly use period (EFUP)	EFUP-50
	An article-related China RoHS declaration table can be found in the download area for the respective article under "Manufacturer declaration". For all articles with EFUP-E, no China RoHS declaration table issued and required.

EU REACH SVHC

REACH candidate substance (CAS No.)	Lead(CAS: 7439-92-1)
	Perfluorobutane sulfonic acid (PFBS) and its salts(CAS: n/a)
SCIP	0d39a2b1-769d-45f9-b6b7-0316cfd161af

Phoenix Contact 2025 © - all rights reserved
https://www.phoenixcontact.com

Phoenix Contact USA
586 Fulling Mill Road
Middletown, PA 17057, United States
(+717) 944-1300
info@phoenixcon.com