# T540D476K016CH6710

T540 HRA, Tantalum, Polymer Tantalum, HRA, 47 uF, 10%, 16 VDC, SMD, Polymer, Molded, High Reliability, C (0.01%/1000 Hrs), 65 mOhms, 7343, 3.1mm

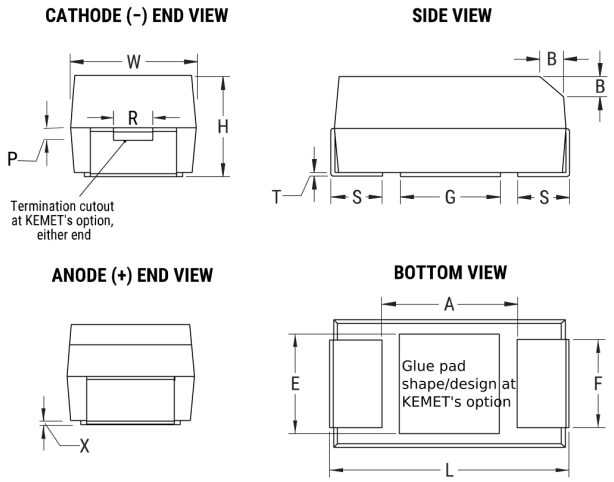


Click here for the 3D model.

## General Information

| | |
|---|---|
| Series | T540 HRA |
| Dielectric | Polymer Tantalum |
| Style | SMD Chip |
| Description | SMD, Polymer, Molded, High Reliability |
| Features | Non-Combustible, Low ESR, High Reliability |
| RoHS | No |
| Prop 65 | ⚠ **WARNING:** Cancer and reproductive harm - http://www.p65warnings.ca.gov. |
| SCIP Number | b064b03e-bd75-42af-b342-1fe94dec2340 |
| Termination | Tin Lead (SnPb) |
| AEC-Q200 | No |
| Typical Component Weight | 352.36 mg |
| Shelf Life | 52 Weeks |
| MSL | 3 |

## Dimensions

| | |
|---|---|
| Footprint | 7343 |
| L | 7.3mm +/-0.3mm |
| W | 4.3mm +/-0.3mm |
| H | 2.8mm +/-0.3mm |
| T | 0.13mm REF |
| S | 1.3mm +/-0.3mm |
| F | 2.4mm +/-0.1mm |
| A | 3.8mm MIN |
| B | 0.5mm +/-0.15mm |
| E | 3.5mm REF |
| G | 3.5mm REF |
| P | 0.9mm REF |
| R | 1mm REF |
| X | 0.1mm +/-0.1mm |

## Specifications

| | |
|---|---|
| Capacitance | 47 uF |
| Capacitance Tolerance | 10% |
| Voltage DC | 16 VDC (105C), 10.72 VDC (125C) |
| Temperature Range | -55/+125°C |
| Rated Temperature | 105°C |
| Life | 2000 Hrs (125C) |
| Humidity | 60C, 90% RH, 500 Hours, rated voltage |
| Dissipation Factor | 10% 120Hz 25C |
| Failure Rate | C (0.01%/1000 Hrs) |
| ESR | 65 mOhms (100kHz 25C) |
| Ripple Current | 1861 mA (rms, 100kHz 45C) |
| Leakage Current | 76 uA (5min 25°C) |
| Testing and Reliability | 10 Cycles Surge Current Testing At -55C +0C/-5C And +85C +/-5C After Voltage Aging |

## Packaging Specifications

| | |
|---|---|
| Packaging | T&R, 178mm |
| Packaging Quantity | 500 |

Statements of suitability for certain applications are based on our knowledge of typical operating conditions for such applications, but are not intended to constitute - and we specifically disclaim - any warranty concerning suitability for a specific customer application or use. This Information is intended for use only by customers who have the requisite experience and capability to determine the correct products for their application. Any technical advice inferred from this Information or otherwise provided by us with reference to the use of our products is given gratis, and we assume no obligation or liability for the advice given or results obtained.



© 2006 - 2024 KEMET