# NBC-P12MSD/ 3,0-93E/P12MSD - Network cable

1554011

https://www.phoenixcontact.com/us/products/1554011

Please be informed that the data shown in this PDF document is generated from our online catalog. Please find the complete data in the user documentation. Our general terms of use for downloads are valid.



Network cable, Ethernet CAT5 (100 Mbps), 4-position, Plug straight M12 Push Pull, coding: D / IP67, on Plug straight M12 Push Pull, coding: D / IP67, cable length: 3 m

## Commercial data

| | |
|---|---|
| Item number | 1554011 |
| Packing unit | 1 pc |
| Minimum order quantity | 1 pc |
| Sales key | BF04 |
| Product key | BF1CJJ |
| GTIN | 4067923035409 |
| Weight per piece (including packing) | 161.5 g |
| Weight per piece (excluding packing) | 22.22 g |
| Customs tariff number | 85444290 |
| Country of origin | PL |

# Technical data

## Product properties

| | |
|---|---|
| Product type | Data cable preassembled |
| Application | Standard |
| Sensor type | Ethernet |
| Number of positions | 4 |
| Shielded | yes |

## Interfaces

| | |
|---|---|
| Bus system | Ethernet |
| Signal type/category | Ethernet CAT5 (IEC 11801), 100 Mbps |

## Signaling

| | |
|---|---|
| Status display | No |
| Status display present | No |

## Electrical properties

| | |
|---|---|
| Nominal voltage $U_N$ | 48 V AC |
| | 60 V DC |
| Nominal current $I_N$ | 1.5 A |
| Transmission medium | Copper |
| Transmission characteristics (category) | CAT5 (IEC 11801:2002) |

## Connector

Connection 1

| | |
|---|---|
| Type | Plug straight M12 Push Pull / IP67 |
| Number of positions | 4 |
| Locking type | Push Pull |
| Coding type | D (Data) |
| Handle color | black |
| Flammability rating according to UL 94 | V0 |
| Material | CuSn (Contact) |
| | Ni/Au (Contact surface) |
| | PA (Contact carriers) |
| | TPU, hardly inflammable, self-extinguishing (Grip) |
| | Zinc die-cast, nickel-plated (Screw connection) |
| | FKM (Seal) |
| Insertion/withdrawal cycles | ≥ 100 |
| Insulation resistance | ≥ 100 MΩ |
| Overvoltage category | II |
| Degree of pollution | 3 |
| Degree of protection | IP67 |

| | |
|---|---|
| Ambient temperature (operation) | -25 °C ... 85 °C |

Connection 2

| | |
|---|---|
| Type | Plug straight M12 Push Pull / IP67 |
| Number of positions | 4 |
| Locking type | Push Pull |
| Coding type | D (Data) |
| Handle color | black |
| Flammability rating according to UL 94 | V0 |
| Material | CuSn (Contact) |
| | Ni/Au (Contact surface) |
| | PA (Contact carriers) |
| | TPU, hardly inflammable, self-extinguishing (Grip) |
| | Zinc die-cast, nickel-plated (Screw connection) |
| | FKM (Seal) |
| Insertion/withdrawal cycles | ≥ 100 |
| Insulation resistance | ≥ 100 MΩ |
| Degree of pollution | 3 |
| Overvoltage category | II |
| Degree of protection | IP67 |
| Ambient temperature (operation) | -25 °C ... 85 °C |

## Cable/line

| | |
|---|---|
| Cable length | 3 m |

Ethernet flexible CAT5, 2-pair [93E]

| | |
|---|---|
| Dimensional drawing |  |
| Shielded | yes |
| UL AWM Style | 20963 (80°C/30 V) |
| Cable weight | 42 kg/km |
| Cable type | Ethernet flexible CAT5, 2-pair |
| Short symbol | 02YS(ST)C11Y |
| Cable type (abbreviation) | 93E |
| Signal type/category | Ethernet CAT5 (IEC 11801), 100 Mbps |
| Cable structure | 2x2xAWG26/7, SF/UTP |
| External cable diameter | 6.40 mm ±0.2 mm |
| Outer sheath, material | PUR |
| External sheath, color | water blue RAL 5021 |

| | |
|---|---|
| Thickness, outer sheath | 1.20 mm |
| Conductor material | Bare Cu litz wires |
| Conductor structure signal line | 7x 0.16 mm |
| AWG signal line | 26 |
| Conductor cross section | 2x 2x 0.14 mm² |
| Material wire insulation | Foamed PE |
| Wire diameter incl. insulation | 0.98 mm |
| Single wire, color | white/orange-orange, white/green-green |
| Twisted pairs | 2 cores to the pair |
| Overall twist | Two pairs with two fillers to the core |
| Shielding | Aluminum-coated foil, tinned copper braided shield |
| Optical shield covering | 70 % |
| Current carrying capacity of cable | 2.00 A (according to DIN VDE 0891-1) |
| Nominal voltage, cable | ≤ 100 V (Peak value, not for high-power applications) |
| Test voltage Core/Core | 700 V (50 Hz, 1 min.) |
| Test voltage Core/Shield | 700.00 V (50 Hz, 1 min.) |
| Cable insulation resistance | ≥ 500 MΩ*km |
| Coupling resistance | ≤ 100.00 mΩ/m (at 10 MHz) |
| Wave impedance | 100 Ω ±5 Ω (at 100 MHz) |
| Loop resistance | ≤ 290.00 Ω/km |
| Cable capacity | approx. 45 nF/km (at 1 kHz) |
| Signal runtime | 5.3 ns/m |
| Tensile strength | ≤ 80 N |
| Minimum bending radius, fixed installation | 4 x D |
| Minimum bending radius, flexible installation | 8 x D |
| Near end crosstalk attenuation (NEXT) | 65.3 dB (with 1 MHz) |
| | 56.3 dB (at 4 MHz) |
| | 50.3 dB (at 10 MHz) |
| | 47.2 dB (at 16 MHz) |
| | 45.8 dB (at 20 MHz) |
| | 42.9 dB (at 31.25 MHz) |
| | 38.4 dB (at 62.5 MHz) |
| | 35.3 dB (at 100 MHz) |
| Power-summated near end crosstalk attenuation (PSNEXT) | 62.3 dB (with 1 MHz) |
| | 53.3 dB (at 4 MHz) |
| | 47.3 dB (at 10 MHz) |
| | 44.2 dB (at 16 MHz) |
| | 42.8 dB (at 20 MHz) |
| | 39.9 dB (at 31.25 MHz) |
| | 35.4 dB (at 62.5 MHz) |
| | 32.3 dB (at 100 MHz) |
| Return attenuation (RL) | 23 dB (at 4 MHz) |
| | 24.1 dB (at 8 MHz) |
| | 25 dB (at 10 MHz) |

| | |
|---|---|
| | 25 dB (at 16 MHz) |
| | 25 dB (at 20 MHz) |
| | 23.6 dB (at 31.25 MHz) |
| | 21.5 dB (at 62.5 MHz) |
| | 20.1 dB (at 100 MHz) |
| Halogen-free | according to IEC 60754-1 |
| Resistance to oil | in accordance with EN 60811-2-1 |
| Flame resistance | according to IEC 60332-1-2 |
| | in acc. to UL VW1 |
| | in accordance with UN ECE-R 118.03 |
| Ambient temperature (operation) | -20 °C ... 80 °C (Cable, flexible installation) |
| | -40 °C ... 80 °C (cable, fixed installation) |

## Drawings

Schematic diagram

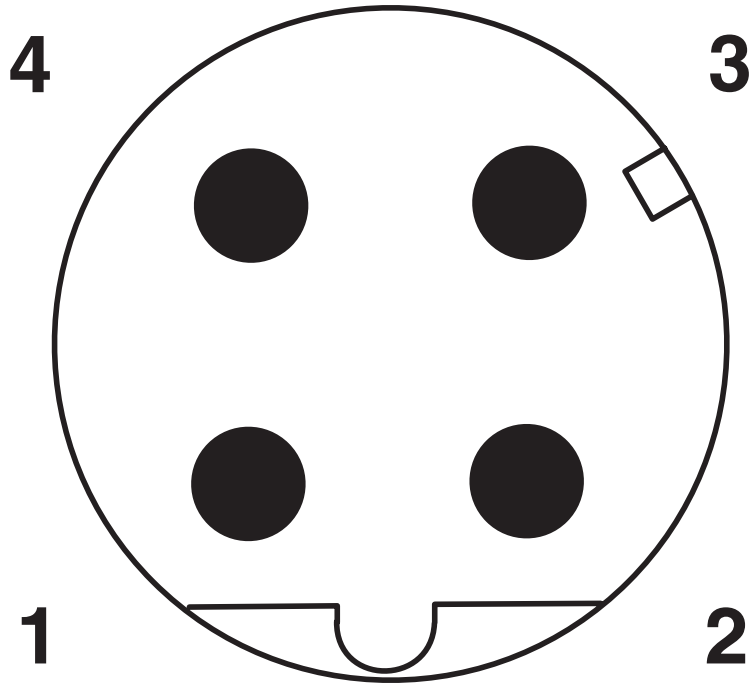


Pin assignment M12 male connector, 4-pos., D-coded, male side

Dimensional drawing

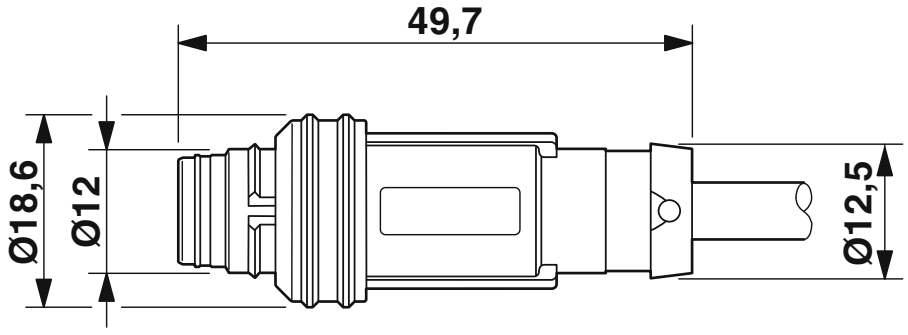


M12 push-pull male connector, straight

Circuit diagram

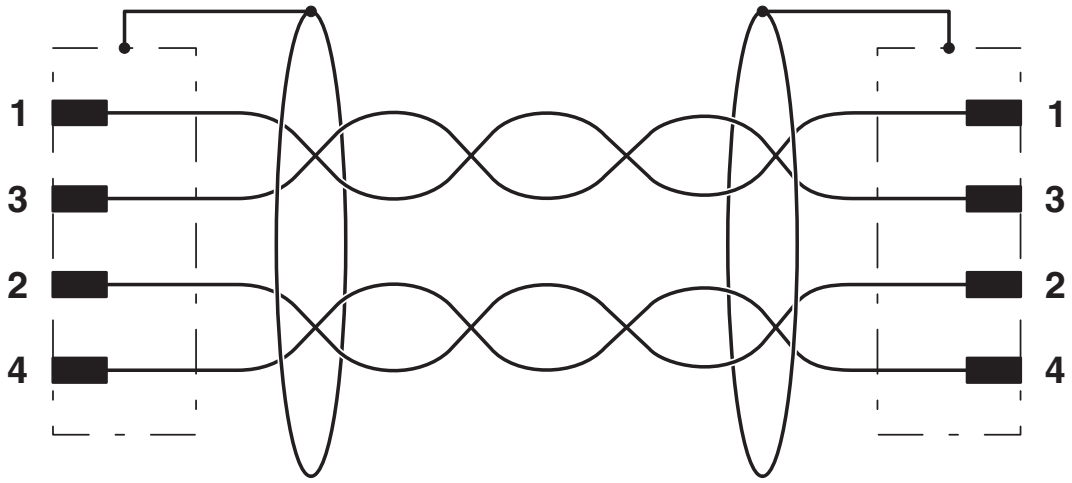

## Approvals

To download certificates, visit the product detail page: https://www.phoenixcontact.com/us/products/1554011

**UL Listed**
Approval ID: FILE E 335024

| | Nominal voltage $U_N$ | Nominal current $I_N$ | Cross section AWG | Cross section $mm^2$ |
|---|---|---|---|---|
| | 30 V | 4 A | - | - |

**cUL Listed**
Approval ID: FILE E 335024

| | Nominal voltage $U_N$ | Nominal current $I_N$ | Cross section AWG | Cross section $mm^2$ |
|---|---|---|---|---|
| | 60 V | 0.5 A | - | - |

**EAC-RoHS**
Approval ID: RU D-DE.HB35.B.00387

**cULus Listed**

## Classifications

### ECLASS

| | |
|---|---|
| ECLASS-11.0 | 27060307 |
| ECLASS-13.0 | 27060307 |

### ETIM

| | |
|---|---|
| ETIM 9.0 | EC001855 |

## Accessories

### PROT-M12 FS-PA-CHAIN - Sealing cap

1430873

https://www.phoenixcontact.com/us/products/1430873

M12 sealing cap made of plastic with fixing band, for sensor cables, for free M12 plugs



### SAC-M12-EXCLIP-M - Locking clip

1558988

https://www.phoenixcontact.com/us/products/1558988

Locking clip for the pin side of sensor/actuator cables with M12 connector and M12 connectors for assembly, for knurl diameter: 15 mm or for Allen key with a wrench size of 14 mm, prevents the disconnection of plug-in connections without tools




Phoenix Contact 2024 © - all rights reserved
https://www.phoenixcontact.com



Phoenix Contact USA
586 Fulling Mill Road
Middletown, PA 17057, United States
(+717) 944-1300
info@phoenixcon.com