SAC-5P- 3,0-PUR/P12FS SH - Sensor/actuator cable

1476892

https://www.phoenixcontact.com/us/products/1476892

Please be informed that the data shown in this PDF document is generated from our online catalog. Please find the complete data in the user documentation. Our general terms of use for downloads are valid.



Sensor/actuator cable, 5-position, PUR halogen-free, black-gray RAL 7021, shielded (Advanced Shielding Technology), Socket straight M12 Push Pull, coding: A, on free cable end, cable length: 3 m

Your advantages

- Easy and safe: 100 % electrically tested plug-in components
- Reliable signal transmission – 360° shielding in environments with electromagnetic interference

Commercial data

Item number	1476892
Packing unit	1 pc
Minimum order quantity	1 pc
Sales key	BF06
Product key	BF1CKE
GTIN	4063151890490
Weight per piece (including packing)	154.6 g
Weight per piece (excluding packing)	22.22 g
Customs tariff number	85444290
Country of origin	PL

Technical data

Product properties

Product type	Sensor/actuator cable
Application	Standard
Number of positions	5
No. of cable outlets	1
Shielded	yes
Coding	A

Insulation characteristics

Overvoltage category	II
Degree of pollution	3

Material specifications

Flammability rating according to UL 94	V0
Outer sheath, material	PUR
Conductor material	Bare Cu litz wires

Electrical properties

Insulation resistance	≥ 100 MΩ
Nominal voltage U_N	48 V AC
	60 V DC
Nominal current I_N	4 A
Max. conductor resistance	58 Ω/km

Mechanical properties

Mechanical data

Insertion/withdrawal cycles	≥ 100
Max. bending cycles	10000000

Signaling

Status display	No
Status display present	No

Connection data

Connection technology

Connection method	Push-Pull

Conductor connection

Connection method	Push-Pull

Connector

Connection 1

Type	Socket straight M12 Push Pull
Number of positions	5
Locking type	Push Pull
Coding type	A

Connection 2

Type	free cable end

Cable/line

Cable length	3 m

PUR halogen-free black [PUR]

Dimensional drawing	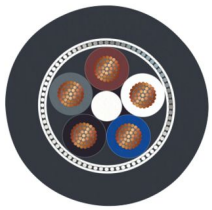
Cable weight	43 kg/km
UL AWM Style	20549 / 10493 (80°C/300 V)
Number of positions	5
Shielded	yes
Cable type	PUR halogen-free black [PUR]
Conductor structure signal line	42x 0.10 mm
AWG signal line	22
Conductor cross section	5x 0.34 mm² (Signal line)
Wire diameter incl. insulation	1.27 mm ±0.02 mm (Signal line)
External cable diameter	5.25 mm ±0.2 mm
Outer sheath, material	PUR
External sheath, color	black-gray RAL 7021
Conductor material	Bare Cu litz wires
Material wire insulation	PP
Single wire, color	brown, white, blue, black, gray
Thickness, insulation	≥ 0.21 mm
Thickness, outer sheath	approx. 0.50 mm
Overall twist	5 wires around filler to the core
Optical shield covering	80 %
Max. conductor resistance	max. 57 Ω/km (at 20 °C)
Insulation resistance	70 GΩ*km (at 20 °C)
Nominal voltage, cable	300 V (at 20 °C)
Test voltage Core/Core	3000 V (at 20 °C)

Smallest bending radius, fixed installation	26 mm
Smallest bending radius, movable installation	52 mm (up to +60 °C)
Max. bending cycles	10000000
Halogen-free	in accordance with DIN VDE 0472 part 815
	in accordance with DIN EN 50267-2-1
Flame resistance	in accordance with UL 758/1581 FT2
	DIN EN 60332-2-2 (20 s)
Resistance to oil	in accordance with DIN EN 60811-2-1
Other resistance	Highly resistant to acids, alkaline solutions and solvents
	hydrolysis and microbe resistant
	Resistant to salt water
	partly UV-resistant (in accordance with DIN EN ISO 4892-2-A)
	abrasion-resistant
Special properties	Flexible cable conduit capable
	Silicone-free
	Free of substances which would hinder coating with paint or varnish
	Low adhesion surface
Ambient temperature (operation)	-40 °C ... 80 °C (cable, fixed installation)
	-25 °C ... 80 °C (Cable, flexible installation)

Environmental and real-life conditions

Ambient conditions

Degree of protection	IP65
	IP67
Ambient temperature (operation)	-25 °C ... 85 °C (Plug / socket)
	-40 °C ... 80 °C (cable, fixed installation)
	-25 °C ... 80 °C (Cable, flexible installation)

Standards and regulations

Standard designation	M12-Push-Pull
Standards/specifications	IEC 61076-2-010

Drawings

Schematic diagram

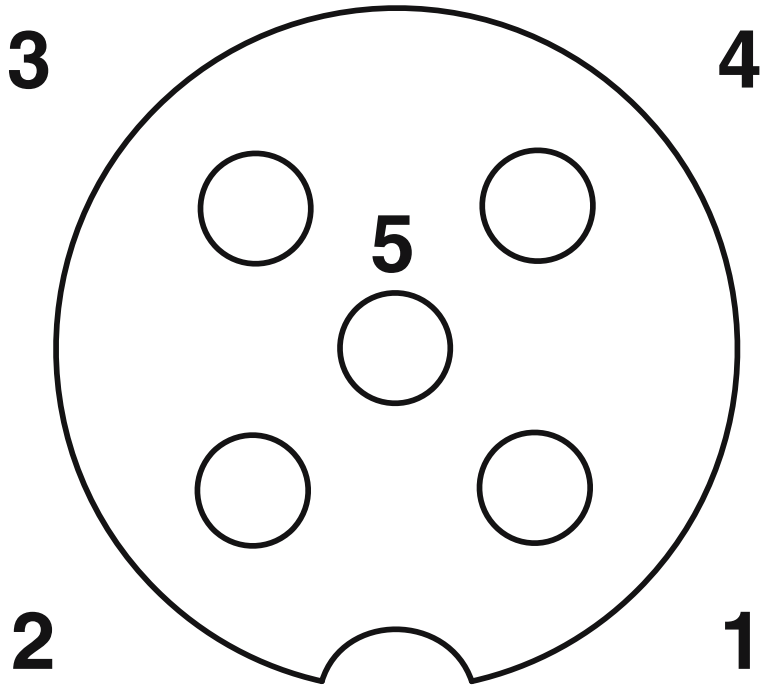

Pin assignment M12 socket, 5-pos., A-coded, view female side

Circuit diagram

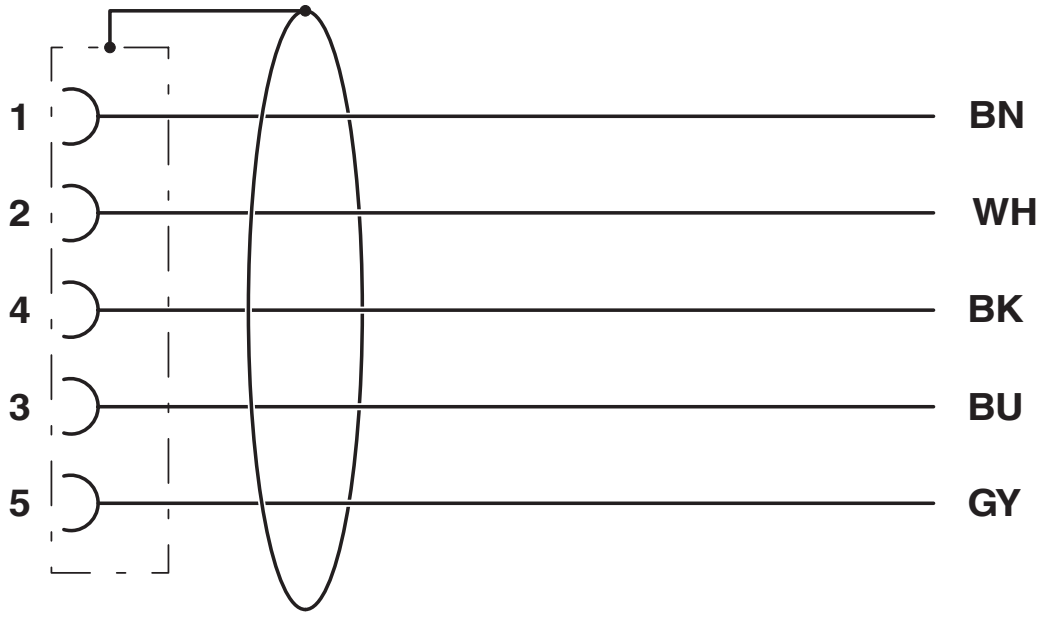

Dimensional drawing

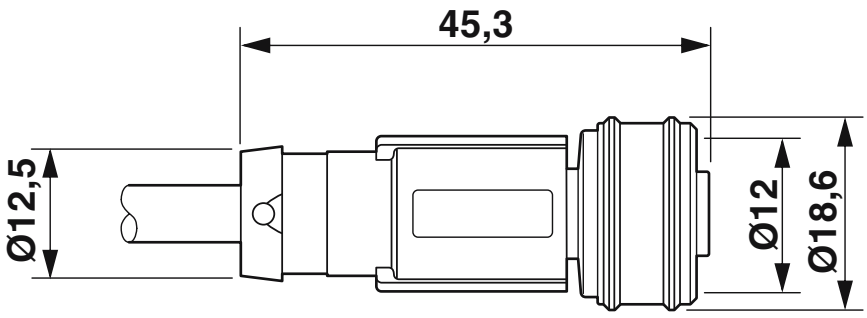

M12 push-pull female, straight, shielded

Classifications

ECLASS

ECLASS-11.0	27060311
ECLASS-12.0	27060311
ECLASS-13.0	27060311

ETIM

ETIM 9.0	EC001855

Environmental product compliance

EU RoHS

Fulfills EU RoHS substance requirements	Yes, No exemptions

China RoHS

Environment friendly use period (EFUP)	EFUP-E
	No hazardous substances above the limits

EU REACH SVHC

REACH candidate substance (CAS No.)	No substance above 0.1 wt%

Phoenix Contact 2024 © - all rights reserved
https://www.phoenixcontact.com

Phoenix Contact USA
586 Fulling Mill Road
Middletown, PA 17057, United States
(+717) 944-1300
info@phoenixcon.com