ESD-SR-S47M

Aliases (UECESDSRS47M00)

KEMET, ESD-SR, EMI Cores, Noise Suppression

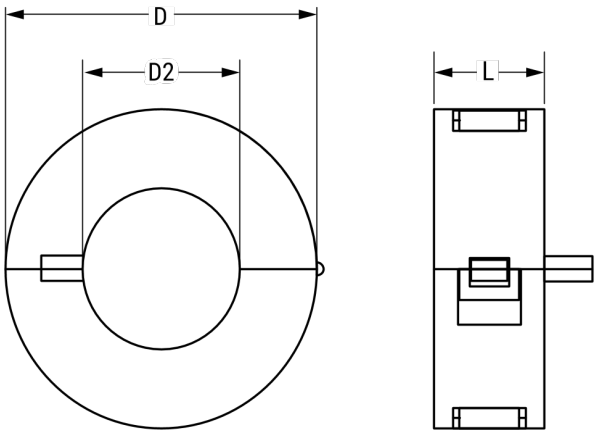

Click here for the 3D model.

General Information

Series	ESD-SR
Style	Round - Snap-on
Cable Type	Round Cable
Description	EMI Core Split, For Round Cables, Snap-on Core
RoHS	Yes
Qualifications	UL94V-0
Case Color	Black
Materials	Mn-Zn

Specifications

Temperature Range	-40/+85°C
Effective Frequency	10 MHz (AM Band Range)

Dimensions

D	53mm +/-1mm
D2	26.5mm MAX
L	19mm +/-1mm

Packaging Specifications

Packaging	Tray, Box
Packaging Quantity	72
Typical Component Weight	89 g

Statements of suitability for certain applications are based on our knowledge of typical operating conditions for such applications, but are not intended to constitute - and we specifically disclaim - any warranty concerning suitability for a specific customer application or use. This Information is intended for use only by customers who have the requisite experience and capability to determine the correct products for their application. Any technical advice inferred from this Information or otherwise provided by us with reference to the use of our products is given gratis, and we assume no obligation or liability for the advice given or results obtained.

© 2006 - 2024 KEMET