Product data sheet

Specifications



Mini circuit breaker, QO, 20A, 1 pole, 120/240VAC, 10kA, bolt on, high density discharge

QOB120HID

Product availability: Stock - Normally stocked in distribution facility

Main

Product	Miniature circuit-breaker
Range	QO
Current Rating	20 A
Voltage Rating	120/240 V AC
Mounting Type	Bolt-on
Number of Poles	1P
Circuit Breaker Type	High intensity discharge
Ratings	Switching Duty rated
Electrical Connection	Pressure plate

Complementary

Interrupt Rating	10 kA 120/240 V AC
Number of Panel Spaces	1
Wire Size	AWG 14...AWG 8 copper or aluminium
Tightening Torque	35.4 lbf.in (4 N.m)
Height	3.0 in (76 mm)
Width	0.7 in (19 mm)
Depth	2.9 in (74 mm)
Net Weight	0.280 lb(US) (0.127 kg)

Environment

Certifications	UL Listed CSA
Ambient Rating	104 °F (40 °C)

Ordering and shipping details

Category	US10DE200015
Discount Schedule	0DE2
GTIN	785901543893
Returnability	Yes
Country of origin	MX

Packing Units

Price is “List Price” and may be subject to a trade discount – check with your local distributor or retailer for actual price.

Disclaimer: This documentation is not intended as a substitute for and is not to be used for determining suitability or reliability of these products for specific user applications

Unit Type of Package 1	PCE
Nbr. of units in pkg.	1
Package 1 Height	3.400 in (8.636 cm)
Package 1 Width	0.800 in (2.032 cm)
Package 1 Length	3.300 in (8.382 cm)
Package weight(Lbs)	4.480 oz (127.006 g)

Contractual warranty

Warranty	18 months

Environmental Data

Schneider Electric aims to achieve Net Zero status by 2050 through supply chain partnerships, lower impact materials, and circularity via our ongoing “Use Better, Use Longer, Use Again” campaign to extend product lifetimes and recyclability.

Environmental Data explained >

How we assess product sustainability >

Environmental footprint

Environmental Disclosure	Product Environmental Profile

Use Better

Materials and Substances

Packaging made with recycled cardboard	No
Packaging without single use plastic	Yes
EU RoHS Directive	Compliant
SCIP Number	Af42fb01-813d-40c0-ae28-b8b3299dbc99
REACh Regulation	REACh Declaration
California proposition 65	WARNING: This product can expose you to chemicals including: Cadmium and cadmium compounds, which is known to the State of California to cause cancer and birth defects or other reproductive harm. For more information go to www.P65Warnings.ca.gov
Halogen content performance	Halogen free product

Use Again

Repack and remanufacture

Circularity Profile	No need of specific recycling operations
Take-back	No

Technical Illustration

Dimensions

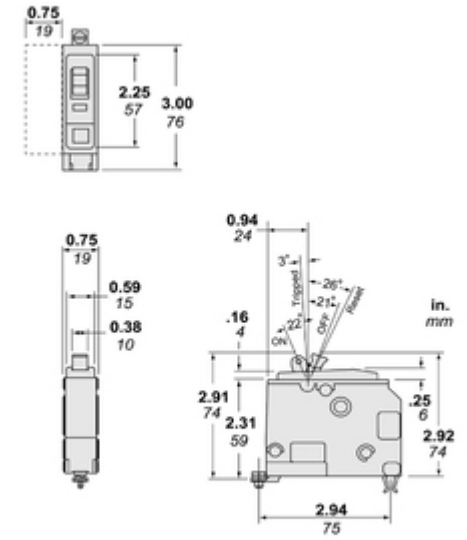

Dimensions are approximate. Refer to technical documentation for additional detail.