MCR-SL-CUC-600-I - Universal current transducer

2308098

https://www.phoenixcontact.com/us/products/2308098

Please be informed that the data shown in this PDF document is generated from our online catalog. Please find the complete data in the user documentation. Our general terms of use for downloads are valid.



Universal current transducer, for measuring DC, AC, and distorted currents, 0 ... 600 A input current, 4 ... 20 mA output

Your advantages

- Variable mounting on DIN rail and mounting panel
- Compact dimensions also enable distributed use
- Simple connection technology thanks to COMBICON plug-in connection terminal blocks
- 3-way isolation
- Universal current measurement, no shunt required

Commercial data

Item number	2308098
Packing unit	1 pc
Minimum order quantity	1 pc
Sales key	C444
Product key	CMMA31
GTIN	4046356566988
Weight per piece (including packing)	291.7 g
Weight per piece (excluding packing)	291.7 g
Customs tariff number	90303370
Country of origin	CN

Technical data

Product properties

Product type	Current measuring transducer

Insulation characteristics

Overvoltage category	III
Pollution degree	2

Electrical properties

Linearity error	<± 1 % (From the range end value)
Maximum power dissipation for nominal condition	1 W
Step response (10-90%)	150 ms
Temperature coefficient, typical	0.02 %/K (0 °C ... 60 °C)
	0.04 %/K (-40 °C ... 65 °C)
Maximum transmission error	<± 1 % (of final value)
Rated insulation voltage	300 V AC

Electrical isolation Input/output

Test voltage	3.5 kV AC (50 Hz, 60 s)

Electrical isolation Input/power supply

Test voltage	3.5 kV AC (50 Hz, 60 s)

General

Accuracy class	1

Supply

Nominal supply voltage	24 V DC
Supply voltage range	20 V DC ... 30 V DC
Max. current consumption	(30 + I_{OUT}) mA
Power consumption	1.65 W

Input data

Measurement

Number of inputs	1
Input current range	0 A AC/DC ... 600 A AC/DC
Overload capacity	3 x I_{IN}
Frequency measuring range	20 Hz ... 6000 Hz (0 Hz)
Curve type	AC, DC or distorted currents

Current transformer

Rated frequency: Standard converter	20 Hz ... 6000 Hz
Primary rated current I_{pn}	600 A
Accuracy class	1

Output data

Signal: Current

Current output signal	4 mA ... 20 mA
Max. current output signal	< 25 mA
Load/output load current output	< 300 Ω

Connection data

Connection method	Push-in connection
Stripping length	10 mm
Conductor cross-section rigid	0.25 mm² ... 2.5 mm²
Conductor cross-section flexible	0.2 mm² ... 2.5 mm²
Conductor cross-section AWG	24 ... 12
Connection method	Through connection

Dimensions

Item dimensions

Width	90 mm
Height	33.8 mm
Depth	85 mm

Circular conductor

Diameter	32 mm

Material specifications

Color	green (RAL 6021)
Housing material	Frianyl B63 V0 GV30

Environmental and real-life conditions

Ambient conditions

Degree of protection	IP20
Ambient temperature (operation)	-40 °C ... 65 °C
Ambient temperature (storage/transport)	-40 °C ... 85 °C

Approvals

CE

Certificate	CE-compliant

UKCA

Certificate	UKCA-compliant

EMC data

Noise immunity	EN 61000-6-2

Noise emission

Standards/regulations	EN 61000-6-4

Mounting

Mounting type	DIN rail mounting

Drawings

Dimensional drawing

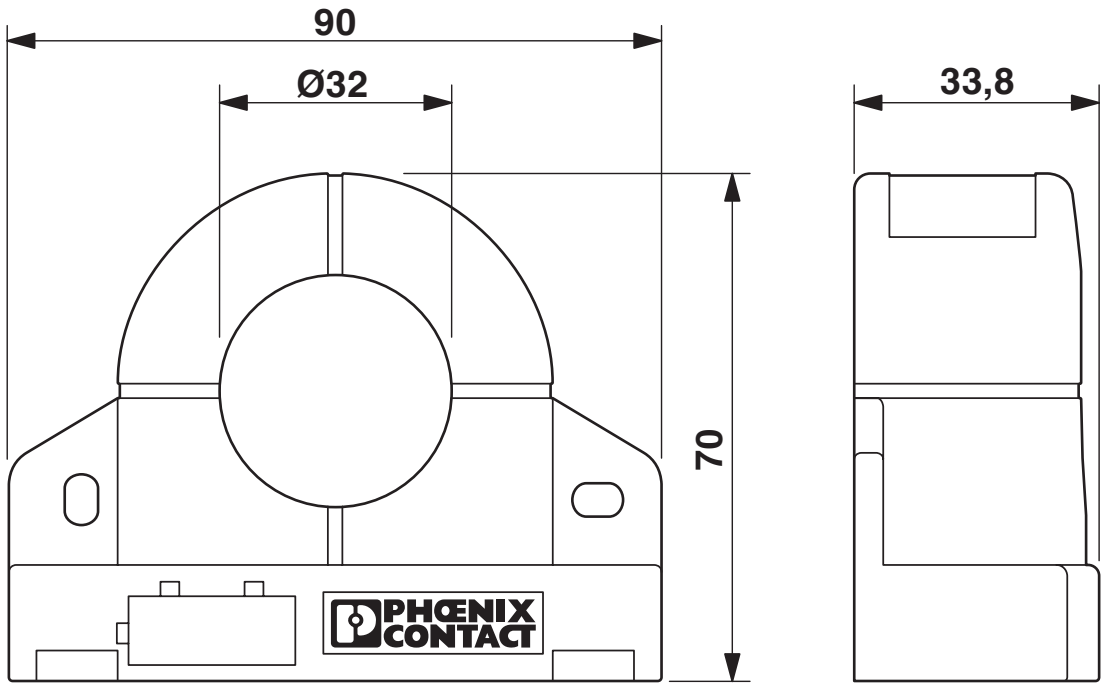

Schematic diagram

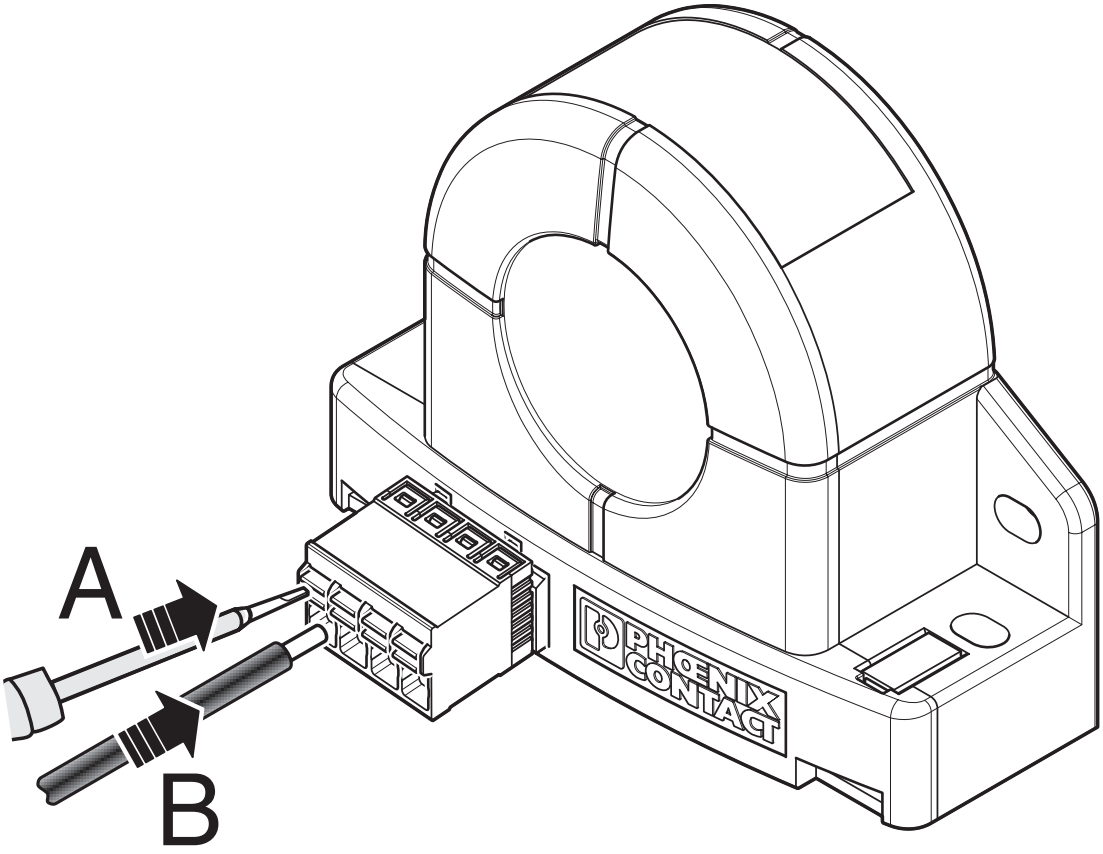

Circuit diagram

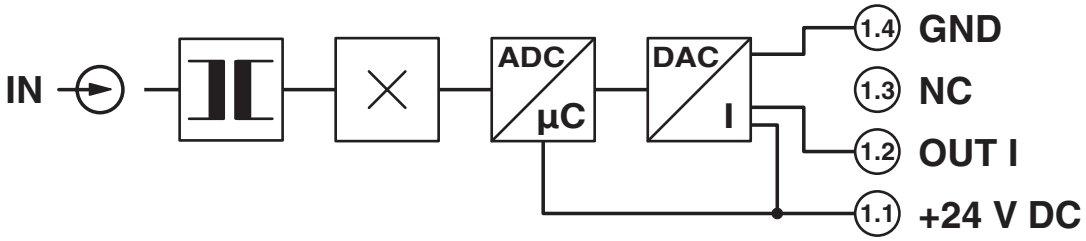

Approvals

To download certificates, visit the product detail page: https://www.phoenixcontact.com/us/products/2308098

EAC
Approval ID: RU*DE.*08.B.01852-19

Classifications

ECLASS

ECLASS-13.0	27210123
ECLASS-15.0	27210123

ETIM

ETIM 9.0	EC002475

UNSPSC

UNSPSC 21.0	39121000

Environmental product compliance

EU RoHS

Fulfills EU RoHS substance requirements	Yes, No exemptions

China RoHS

Environment friendly use period (EFUP)	EFUP-E
	No hazardous substances above the limits

EU REACH SVHC

REACH candidate substance (CAS No.)	No substance above 0.1 wt%

Phoenix Contact 2025 © - all rights reserved
https://www.phoenixcontact.com

Phoenix Contact USA
586 Fulling Mill Road
Middletown, PA 17057, United States
(+717) 944-1300
info@phoenixcon.com