Data sheet



AHM36I-SCCC014x12

AHS/AHM36

ABSOLUTE ENCODERS

SICK
Sensor Intelligence.



Illustration may differ

Ordering information

Type	part no.
AHM36I-SCCC014x12	1099332

Other models and accessories ➜ www.sick.com/AHS_AHM36

Detailed technical data

Safety-related parameters

$MTTF_D$ (mean time to dangerous failure)	270 years (EN ISO 13849-1) [1]

[1] This product is a standard product and does not constitute a safety component as defined in the Machinery Directive. Calculation based on nominal load of components, average ambient temperature 40 °C, frequency of use 8760 h/a. All electronic failures are considered hazardous. For more information, see document no. 8015532.

Performance

Number of steps per revolution (max. resolution)	16,384 (14 bit)
Number of revolutions	4,096 (12 bit)
Max. resolution (number of steps per revolution x number of revolutions)	14 bit x 12 bit (16,384 x 4,096)
Error limits G	0.35° (at 20 °C) [1]
Repeatability standard deviation σ_r	0.2° (at 20 °C) [2]

[1] In accordance with DIN ISO 1319-1, position of the upper and lower error limit depends on the installation situation, specified value refers to a symmetrical position, i.e. deviation in upper and lower direction is the same.
[2] In accordance with DIN ISO 55350-13; 68.3% of the measured values are inside the specified area.

Interfaces

Communication interface	CANopen
Data protocol	CANopen CiA DS-301 V4.02, CiA DSP-305 LSS, Encoder Profile: - CIA DS-406, V3.2. - Class C2
Address setting	0 ... 127, default: 5
Data transmission rate (baud rate)	20 kbit/s ... 1,000 kbit/s, default: 125 kbit/s

[1] Valid positional data can be read once this time has elapsed.
[2] See accessories.

Initialization time	2 s [1]
Process data	Position, speed, Temperature
Parameterising data	Number of steps per revolution Number of revolutions PRESET Counting direction Sampling rate for speed calculation Unit for output of the speed value Round axis functionality Electronic cams(2 channels x 8 cams)
Available diagnostics data	Minimum and maximum temperature Maximumspeed Power-on counter Operatinghours counter power-on/motion Counter of direction changes/number of movements cw/number of movements ccw Minimum andmaximum operating voltage
Status information	CANopen status via status LED
Bus termination	Via external terminator [2]

[1] Valid positional data can be read once this time has elapsed.
[2] See accessories.

Electronics

Connection type	Male connector, M12, 5-pin, universal
Supply voltage	10 ... 30 V
Power consumption	≤ 1.5 W (without load)
Reverse polarity protection	✓

Mechanics

Mechanical design	Solid shaft, face mount flange
Shaft diameter	10 mm [1]
Shaft length	24 mm
Characteristics of the shaft	With flat
Weight	0.2 kg [2]
Shaft material	Stainless steel 1,4305
Flange material	Stainless steel 1,4305
Housing material	Stainless steel 1,4305
Start up torque	1 Ncm (+20 °C)
Operating torque	< 1 Ncm (+20 °C)
Permissible shaft loading	40 N (radial) 20 N (axial)
Operating speed	≤ 6,000 min^{-1} [3]
Moment of inertia of the rotor	2.5 gcm^2
Bearing lifetime	3.6 x 10^8 revolutions
Angular acceleration	≤ 500,000 rad/s^2

[1] For use with the adapters 2072298 and 2072295.
[2] Based on devices with male connector.
[3] Allow for self-heating of 3.5 K per 1,000 rpm when designing the operating temperature range.

Ambient data

EMC	According to EN 61000-6-2 and EN 61000-6-3
Enclosure rating	IP67 (IEC 60529) IP69K (IEC 60529)
Permissible relative humidity	90 % (Condensation not permitted)
Operating temperature range	–40 °C ... +85 °C
Storage temperature range	–40 °C ... +100 °C, without package
Resistance to shocks	100 g, 6 ms (EN 60068-2-27)
Resistance to vibration	20 g, 10 Hz ... 2,000 Hz (EN 60068-2-6) [1)]

[1)] For side-mounted encoders (horizontal encoder shaft, vertical stator coupling), additional damping measures may be required in some cases as resonances can arise. Furthermore, the cable must be fastened with the shortest possible distance to the encoder.

Classifications

ECLASS 5.0	27270502
ECLASS 5.1.4	27270502
ECLASS 6.0	27270590
ECLASS 6.2	27270590
ECLASS 7.0	27270502
ECLASS 8.0	27270502
ECLASS 8.1	27270502
ECLASS 9.0	27270502
ECLASS 10.0	27270502
ECLASS 11.0	27270502
ECLASS 12.0	27270502
ETIM 5.0	EC001486
ETIM 6.0	EC001486
ETIM 7.0	EC001486
ETIM 8.0	EC001486
UNSPSC 16.0901	41112113

Certificates

EU declaration of conformity	✓
UK declaration of conformity	✓
ACMA declaration of conformity	✓
Moroccan declaration of conformity	✓
China-RoHS	✓
cTUVus certificate	✓
CANopen certificate	✓
ECE test certificate	✓
Information according to Art. 3 of Data Act (Regulation EU 2023/2854)	✓

Dimensional drawing Solid shaft, face mount flange, male connector

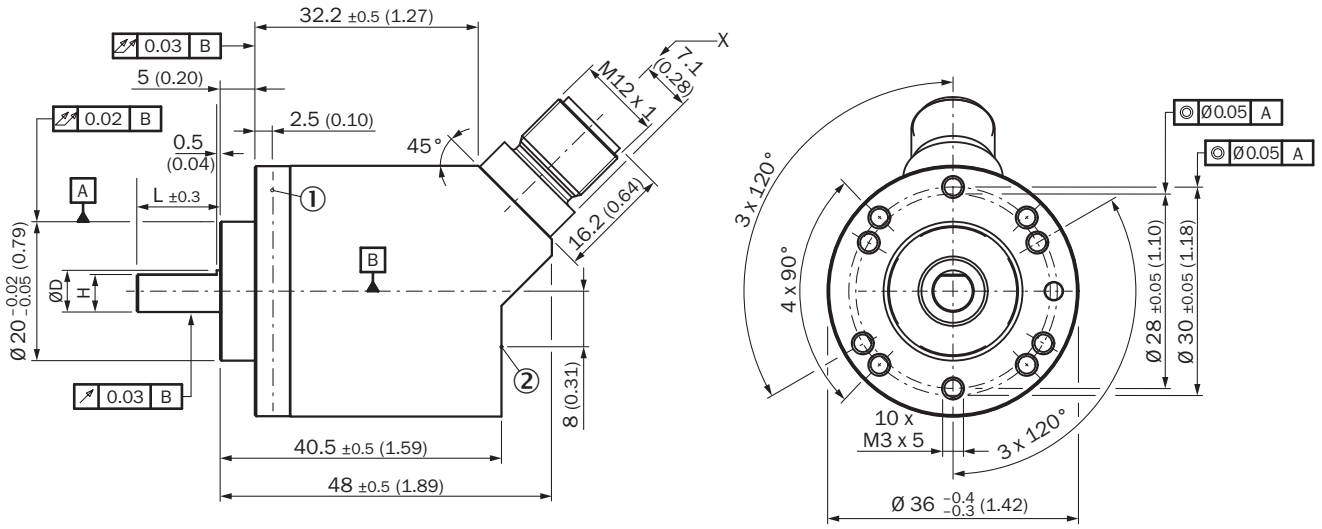

Dimensions in mm (inch)
Non-tolerated dimensions according to DIN-ISO 2768-mk
① Measuring point for operating temperature
② measuring point for vibrations

Type	Shaft diameterØ D f7	B	H
AHx36x-S1xxxxxxxxAHx36x-S3xxxxxxxx	6 mm	3,6 mm	5,4 mm
AHx36x-S9xxxxxxxxAHx36x-S5xxxxxxxx	8 mm	3,9 mm	7,5 mm
AHx36x-S2xxxxxxxxAHx36x-S4xxxxxxxxAHx36x-SCxxxxxxxx	10 mm	6 mm	9 mm
AHx36x-SAxxxxxxxxAHx36x-S8xxxxxxxx	1/4″	3,85 mm	5,7 mm
AHx36x-SBxxxxxxxxAHx36x-S7xxxxxxxx	3/8″	4,35 mm	9 mm

Attachment specifications Solid shaft, face mount flange with flange adapter, centering collar D20 on D36 (BEF-FA-020-036-I, 2103986)

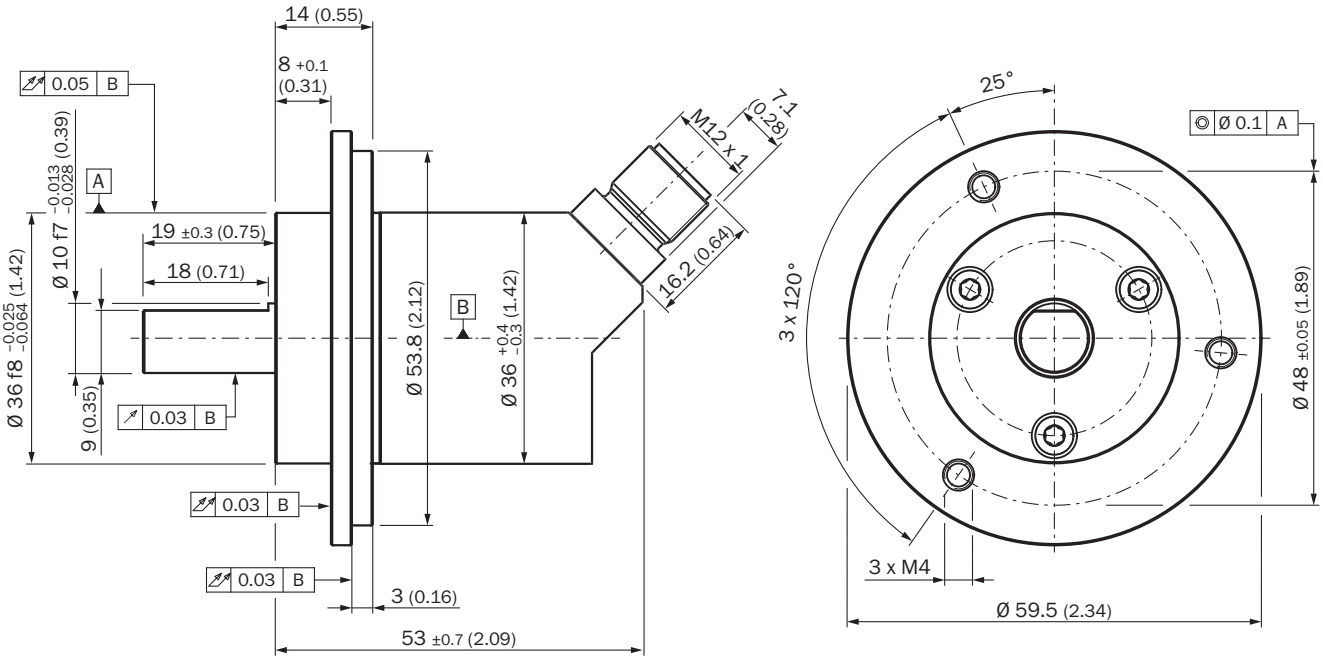

order example for 10 mm shaft diameter: AHx36I-SCxx0xxxxx + BEF-FA-020-036-I (adapter is not pre-assembled)

Attachment specifications Solid shaft, face mount flange with flange adapter, centering collar D20 on D30 (BEF-FA-020-030-I, 2103983)

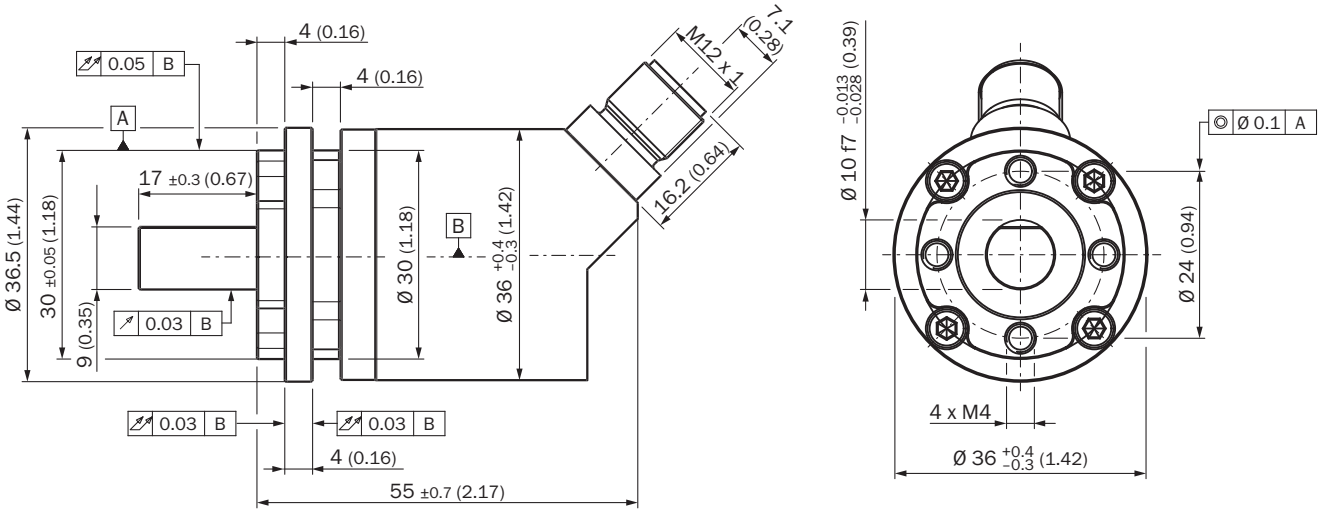

order example for 10 mm shaft diameter: AHx36I-SCxx0xxxxx + BEF-FA-020-030-I (adapter is not pre-assembled)

PIN assignment

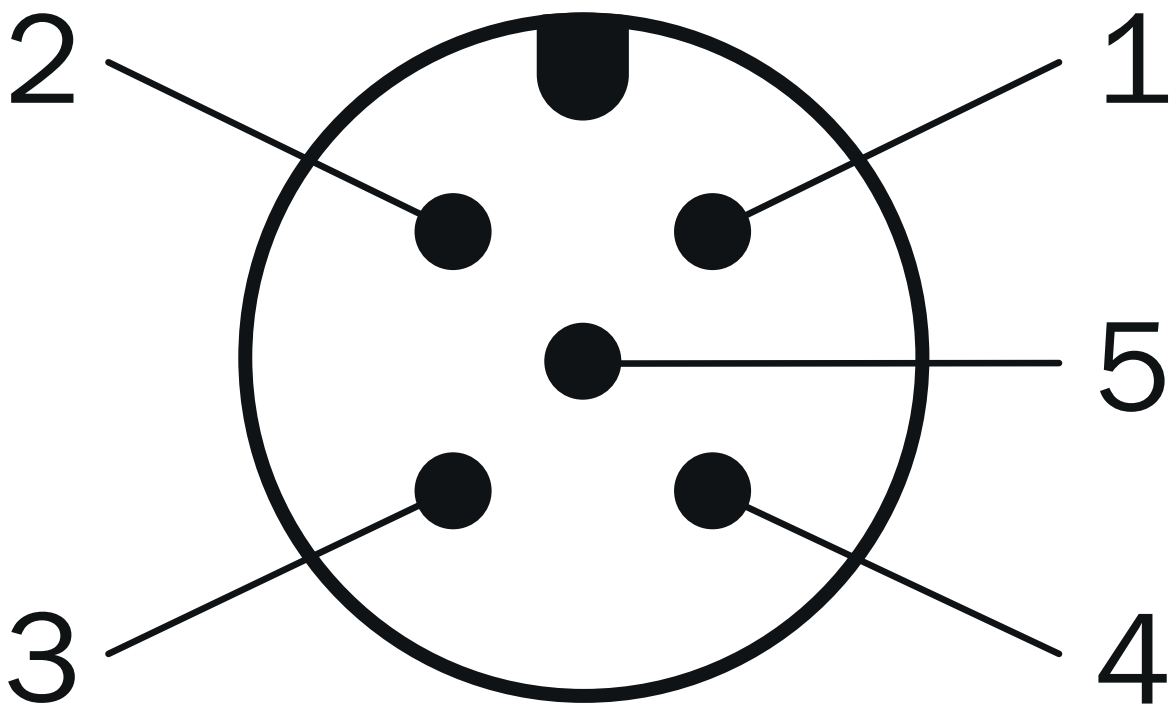

PIN	Signal	Wire colors (cable connection)	Function
1	CAN Shield	White	Screen
2	VDC	Red	Supply voltageEn-coder10 V DC ... 30 V DC
3	GND/CAN GND	Blue	0 V (GND)
4	CAN high	Black	CAN signal
5	CAN low	Pink	CAN signal
Housing	-	-	Screen

Recommended accessories

Other models and accessories ➜ www.sick.com/AHS_AHM36

	Brief description	Type	part no.
connectors and cables			
	• **Connection type head A:** Female connector, M12, 5-pin, straight, A-coded • **Description:** Shielded • **Connection systems:** Screw-type terminals • **Permitted cross-section:** ≤ 0.75 mm² • **Application:** Hygienic and washdown zones	YF12ES5-0075S5586A	2097335
	• **Connection type head A:** Male connector, M12, 5-pin, straight, A-coded • **Description:** Shielded • **Connection systems:** Screw-type terminals • **Permitted cross-section:** ≤ 0.75 mm² • **Application:** Hygienic and washdown zones	YM12ES5-0075S5586A	2097336
	• **Connection type head A:** Female connector, M12, 5-pin, straight, A-coded • **Connection type head B:** Flying leads • **Signal type:** Fieldbus, CANopen, DeviceNet™ • **Cable:** 2 m, 4-wire, PUR, halogen-free • **Description:** Fieldbus, shieldedCANopenDeviceNet™ • **Application:** Drag chain operation, Zones with oils and lubricants	YF2A55-020C1BXLEAX	2107874
	• **Connection type head A:** Female connector, M12, 5-pin, angled, A-coded • **Connection type head B:** Flying leads • **Signal type:** Fieldbus, CANopen, DeviceNet™ • **Cable:** 2 m, 4-wire, PUR, halogen-free • **Description:** Fieldbus, shieldedCANopenDeviceNet™ • **Application:** Drag chain operation, Zones with oils and lubricants	YG2A55-020C1BXLEAX	2107899
	• **Connection type head A:** Female connector, M12, 5-pin, straight, A-coded • **Connection type head B:** Male connector, M12, 5-pin, straight, A-coded • **Signal type:** Fieldbus, CANopen, DeviceNet™ • **Cable:** 2 m, 4-wire, PUR, halogen-free • **Description:** Fieldbus, shieldedCANopenDeviceNet™ • **Application:** Drag chain operation, Zones with oils and lubricants	YF2A55-020C1B-M2A55	2107898
	• **Connection type head A:** Female connector, M12, 5-pin, angled, A-coded • **Connection type head B:** Male connector, M12, 5-pin, straight, A-coded • **Signal type:** Fieldbus, CANopen, DeviceNet™ • **Cable:** 2 m, 4-wire, PUR, halogen-free • **Description:** Fieldbus, shieldedCANopenDeviceNet™ • **Application:** Drag chain operation, Zones with oils and lubricants	YG2A55-020C1B-M2A55	2107901
	• **Connection type head A:** Female connector, M12, 5-pin, straight • **Connection type head B:** Female connector, D-Sub, 9-pin, straight • **Signal type:** CANopen • **Description:** CANopen, shielded • **Note:** Programming adapter cable for programming tool PGT-12-Pro	DDL-2D05-G0M5BC9	2083805

	Brief description	Type	part no.
shaft adaptation			
	• **Product segment:** Shaft adaptation • **Product:** Shaft couplings • **Description:** Bellows coupling, shaft diameter 10 mm/10 mm; maximum shaft offset: radial +/- 0.25 mm, axial +/- 0.4 mm, angular +/- 4°; max. revolutions 10,000 rpm, –30° to +120 °C, max. torque 120 Ncm; material: stainless steel bellows, aluminum clamping hubs	KUP-1010-B	5312983
	• **Product segment:** Shaft adaptation • **Product:** Shaft couplings • **Description:** 10 mm / 12 mm; maximum shaft offset: radial +/- 0.25 mm, axial +/- 0.4 mm, angular +/- 4°; max. revolutions 10,000 rpm, –30° to +120 °C, max. torque 120 Ncm; material: stainless steel bellows, aluminum clamping hubs	KUP-1012-B	5312984
	• **Product segment:** Shaft adaptation • **Product:** Shaft couplings • **Description:** Double loop coupling, shaft diameter 8 mm / 10 mm, max. shaft offset: radially +/- 0,25 mm, axially +/-0,4 mm, angle +/- 4 degrees;max. speed 10.000 rpm, –30 to +120 degrees Celsius, torsional spring stiffness of 150 Nm/rad	KUP-0810-D	5326704
	• **Product segment:** Shaft adaptation • **Product:** Shaft couplings • **Description:** Double loop coupling, shaft diameter 10 mm / 10 mm, Maximum shaft offset: radial +/- 2.5 mm, axial +/- 3 mm, angular +/- 10°; max. speed 3,000 rpm, –30° to +80 °C, max. torque 1.5 Nm; material: polyurethane, galvanized steel flange	KUP-1010-D	5326703
	• **Product segment:** Shaft adaptation • **Product:** Shaft couplings • **Description:** Double loop coupling, shaft diameter 10 mm / 12 mm, Maximum shaft offset: radial +/- 2.5 mm, axial +/- 3 mm, angular +/- 10°; max. speed 3,000 rpm, –30° to +80 °C, max. torque 1.5 Nm; material: polyurethane, galvanized steel flange	KUP-1012-D	5326702
	• **Product segment:** Shaft adaptation • **Product:** Shaft couplings • **Description:** Spring washer coupling, shaft diameter 10 mm / 10 mm, maximum shaft offset, radial ± 0.3 mm, axial ± 0.4 mm, angle ± 2.5°, torsion spring stiffness 30 Nm/rad; material: aluminum flange, glass-fiber reinforced polyamide membrane and hardened steel coupling pin	KUP-1010-F	5312986
	• **Product segment:** Shaft adaptation • **Product:** Shaft couplings • **Description:** Claw coupling, shaft diameter 8 mm / 10 mm, damping element 80 shore blue, maximum shaft offset: radial ± 0.22 mm, axial ± 1 mm angular ± 1.3°, max. speed 19,000 rpm, angle of twist max. 10°, –30 °C to +80 °C, max. torque 800 Ncm, tightening torque of screws: ISO 4029 150 Ncm, material: aluminum flange, damping element: polyurethane	KUP-0810-J	2128267
	• **Product segment:** Shaft adaptation • **Product:** Shaft couplings • **Description:** Claw coupling, shaft diameter 10 mm / 10 mm, damping element 80 shore blue, maximum shaft offset: radial ± 0.22 mm, axial ± 1 mm angular ± 1.3°, max. speed 19,000 rpm, angle of twist max. 10°, –30 °C to +80 °C, max. torque 800 Ncm, tightening torque of screws: ISO 4029 150 Ncm, material: aluminum flange, damping element: polyurethane	KUP-1010-J	2127054
	• **Product segment:** Shaft adaptation • **Product:** Shaft couplings • **Description:** Claw coupling, shaft diameter 10 mm / 12 mm, damping element 80 shore blue, maximum shaft offset: radial ± 0.22 mm, axial ± 1 mm angular ± 1.3°, max. speed 19,000 rpm, angle of twist max. 10°, –30 °C to +80 °C, max. torque 800 Ncm, tightening torque of screws: ISO 4029 150 Ncm, material: aluminum flange, damping element: polyurethane	KUP-1012-J	2128265

SICK AT A GLANCE

SICK is one of the leading manufacturers of intelligent sensors and sensor solutions for industrial applications. A unique range of products and services creates the perfect basis for controlling processes securely and efficiently, protecting individuals from accidents and preventing damage to the environment.

We have extensive experience in a wide range of industries and understand their processes and requirements. With intelligent sensors, we can deliver exactly what our customers need. In application centers in Europe, Asia and North America, system solutions are tested and optimized in accordance with customer specifications. All this makes us a reliable supplier and development partner.

Comprehensive services complete our offering: SICK LifeTime Services provide support throughout the machine life cycle and ensure safety and productivity.

For us, that is “Sensor Intelligence.”

WORLDWIDE PRESENCE:

Contacts and other locations –www.sick.com