NCT375

Industry Standard Digital Temperature Sensor with 2-wire Interface

The NCT375 is a two-wire serially programmable temperature sensor with an over-temperature/interrupt output pin to signal out of limit conditions. This is an open-drain pin and can operate in either comparator or interrupt mode. Temperature measurements are converted into digital form using a high resolution (12 bit), sigma-delta, analog-to-digital converter (ADC). The device operates over the –55°C to +125°C temperature range.

Communication with the NCT375 is accomplished via the SMBus/I^{2}C interface. Three address selection pins, A2, A1 and A0, can be used to connect up to 8 NCT375s to a single bus. Through this interface the NCT375s internal registers may be accessed. These registers allow the user to read the current temperature, change the configuration settings and adjust the temperature limits.

The NCT375 has a wide supply voltage range of 3.0 V to 5.5 V. The average supply current is 575 μA at 3.3 V. It also offers a shutdown mode to conserve power. The typical shutdown current is 3 μA.

The NCT375 is available in three, space saving packages – 8-lead DFN, 8-lead Micro8™ and 8-lead SOIC and is also fully pin and register compatible with the NCT75, LM75 and TCN75.

Features

- 12-bit Temperature-to-Digital Converter
- Input Voltage Range from 3.0 V to 5.5 V
- Temperature Range from −55°C to +125°C
- SMBus/I^{2}C Interface
- Overtemperature Indicator
- Support for SMBus/$\overline{\text{ALERT}}$
- Shutdown Mode for Low Power Consumption
- One-shot Mode
- Available in 8-pin DFN, 8-pin Micro8™ and SOIC Packages
- These Devices are Pb-Free, Halogen Free/BFR Free and are RoHS Compliant

Applications

- Computer Thermal Monitoring
- Thermal Protection
- Isolated Sensors
- Battery Management
- Office Electronics
- Electronic Test Equipment
- Thermostat Controls
- System Thermal Management

ON Semiconductor®

www.onsemi.com

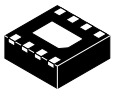

DFN8
CASE 506AA



SOIC8
CASE 751

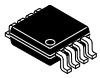

Micro8™
CASE 846A

PIN ASSIGNMENT

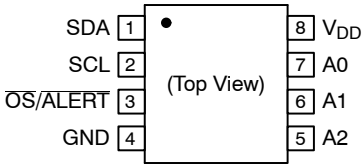

MARKING DIAGRAMS

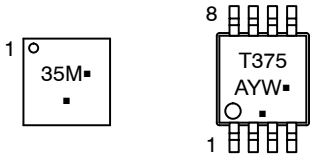

DFN8 **Micro8™**

M = Date Code
A = Assembly Location
Y = Year
W = Work Week
▪ = Pb-Free Package

(Note: Microdot may be in either location)

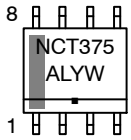

SOIC8

A = Assembly Location
L = Wafer Lot
Y = Year
W = Work Week
▪ = Pb-Free Package

ORDERING INFORMATION

See detailed ordering and shipping information in the package dimensions section on page 13 of this data sheet.

© Semiconductor Components Industries, LLC, 2015

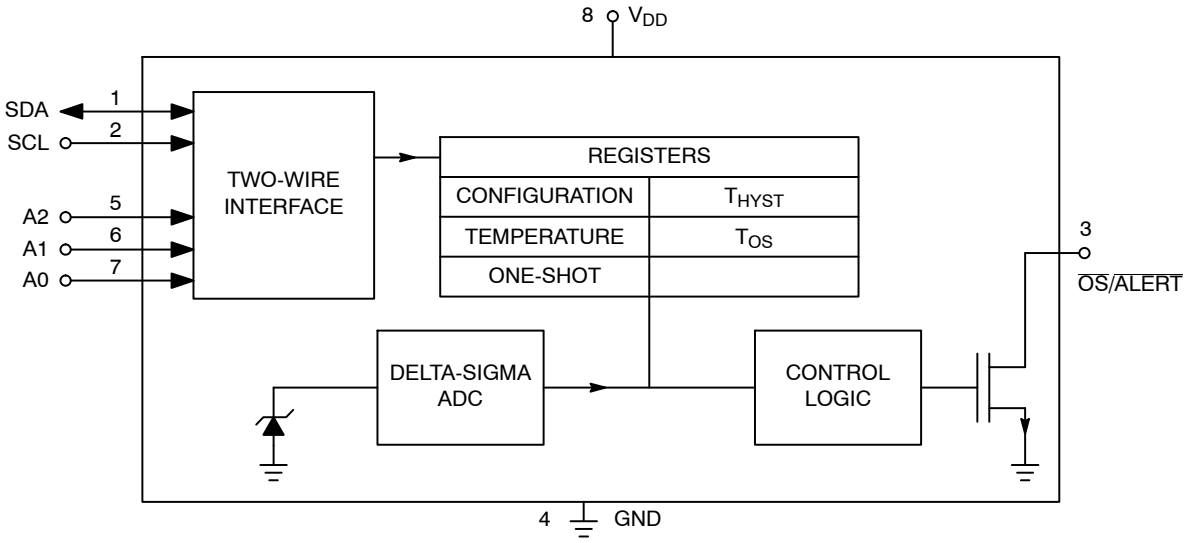

Figure 1. Simplified Block Diagram

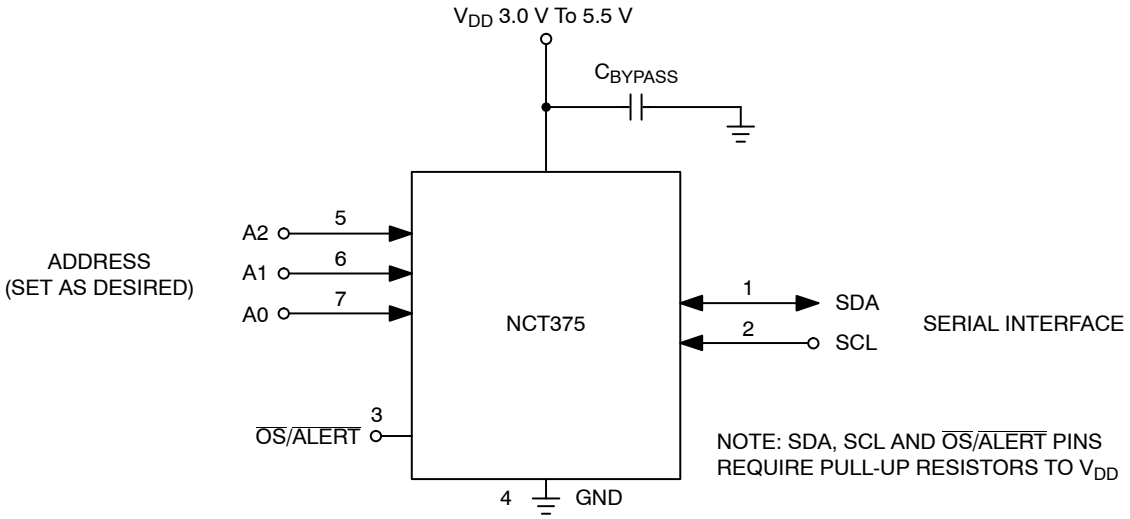

Figure 2. Typical Application Circuit

Table 1. PIN FUNCTION DESCRIPTION

Pin No.	Pin Name	Description
1	SDA	SMBus/I^2C Serial Bi-directional Data Input/Output. Open-drain pin; needs a pull-up resistor.
2	SCL	Serial Clock Input. Open-drain pin; needs a pull-up resistor.
3	$\overline{OS}$/ALERT	Over-temperature Indicator. Open-drain output; needs a pullup resistor. Active Low output.
4	GND	Power Supply Ground.
5	A2	SMBus/I^2C Serial Bus Address Selection Pin. Connect to GND or V_{DD} to set the desired I^2C address.
6	A1	SMBus/I^2C Serial Bus Address Selection Pin. Connect to GND or V_{DD} to set the desired I^2C address.
7	A0	SMBus/I^2C Serial Bus Address Selection Pin. Connect to GND or V_{DD} to set the desired I^2C address.
8	V_{DD}	Positive Supply Voltage, 3.0 V to 5.5 V. Bypass to ground with a 0.1 μF bypass capacitor.

Table 2. ABSOLUTE MAXIMUM RATINGS

Rating	Symbol	Value	Unit
Supply Voltage	V_{DD}	−0.3 to +7	V
Input Voltage on SCL, SDA, A2, A1, A0 and $\overline{OS}/\overline{ALERT}$.		−0.3 to V_{DD} + 0.3	V
Input Current on SDA, A2, A1, A0 and $\overline{OS}/\overline{ALERT}$.	I_{IN}	−1 to +50	mA
Maximum Junction Temperature	$T_{J(max)}$	150.7	°C
Operating Temperature Range	T_{OP}	−55 to 125	°C
Storage Temperature Range	T_{STG}	−65 to 160	°C
ESD Capability, Human Body Model (Note 1)	ESD_{HBM}	2,000	V
ESD Capability, Machine Model (Note 1)	ESD_{MM}	400	V

Stresses exceeding those listed in the Maximum Ratings table may damage the device. If any of these limits are exceeded, device functionality should not be assumed, damage may occur and reliability may be affected.

1. This device series incorporates ESD protection and is tested by the following methods:
   ESD Human Body Model tested per AEC−Q100−002 (EIA/JESD22−A114)
   ESD Machine Model tested per AEC−Q100−003 (EIA/JESD22−A115)

Table 3. OPERATING RANGES

Rating	Symbol	Min	Max	Unit
Operating Supply Voltage	V_{IN}	3.0	5.5	V
Operating Ambient Temperature Range	T_A	−55	125	°C

Table 4. SMBus TIMING SPECIFICATIONS

Parameter	Symbol	Test Conditions	Min	Typ	Max	Unit
Serial Clock Frequency	f_{SCL}		DC	–	400	kHz
Start Condition Hold Time	$t_{HD:STA}$		0.6	–	–	μs
Stop Condition Setup Time	$t_{SU:STO}$	90% of SCL to 10% of SDA	100	–	–	ns
Clock Low Period	t_{LOW}		1.3	–	–	μs
Clock High Period	t_{HIGH}		0.6	–	–	μs
Start Condition Setup Time	$t_{SU:STA}$	90% of SCL to 90% of SDA	100	–	–	ns
Data Setup Time	$t_{SU:DAT}$	10% of SDA to 10% of SCL	100	–	–	ns
Data Hold Time (Note 2)	$t_{HD:DAT}$	10% of SCL to 10% of SDA	0	–	76	ns
SDA/SCL Rise Time	t_R		–	300	–	ns
SDA/SCL Fall Time	t_F		–	300	–	ns
Minimum RESET Pulse Width	t_{RESET}		1.3	–	–	μs
Bus Free Time Between STOP & START Conditions	t_{BUF}		1.3	–	–	μs
SDA Time Low for Reset of Serial Interface	$t_{TIMEOUT}$		75	–	325	ms

Functional operation above the stresses listed in the Recommended Operating Ranges is not implied. Extended exposure to stresses beyond the Recommended Operating Ranges limits may affect device reliability.

2. This refers to the hold time when the NCT375 is writing data to the bus.

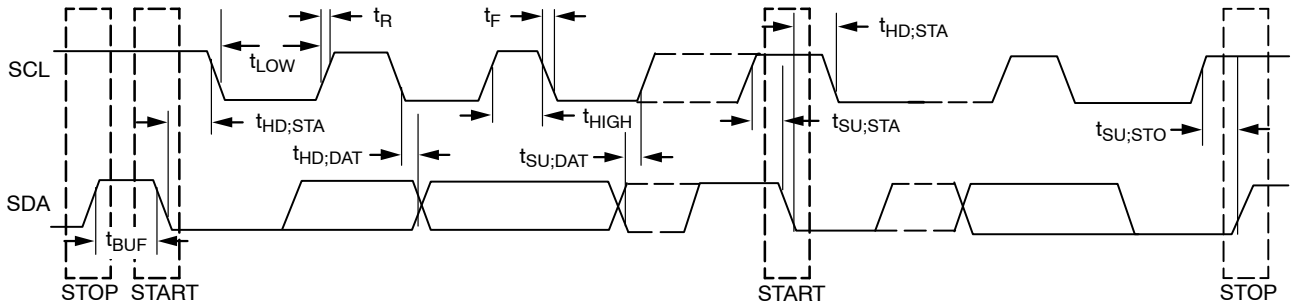

Figure 3. Serial Interface Timing

Table 5. ELECTRICAL CHARACTERISTICS
(T_A = T_{MIN} to T_{MAX}, V_{DD} = 3.0 V to 5.5 V. All specifications for −55°C to +125°C, unless otherwise noted.)

Parameter	Test Conditions	Min	Typ	Max	Unit
TEMPERATURE SENSOR AND ADC					
Accuracy at V_{DD} = 3.0 V to 5.5 V	T_A = 0°C to +70°C T_A = −25°C to +100°C T_A = −55°C to +125°C	– – –	– – –	±1 ±2 ±3	°C
ADC Resolution		–	12	–	Bits
Temperature Resolution		–	0.0625	–	°C
Temperature Conversion Time	One-shot Mode	–	48.5	–	ms
Update Rate		–	80	–	ms
POWER REQUIREMENTS					
Supply Voltage		3.0	–	5.5	V
POR Threshold		2.75	–	–	V
Supply Current	Peak Current while Converting and I^2C Interface Inactive	–	–	0.8	mA
Average Current	Average Current over 1 Conversion Cycle	–	0.44	0.575	mA
Shutdown Mode at 3.3 V	Supply Current in Shutdown Mode	–	3	12	μA
$\overline{OS}$/$\overline{ALERT}$ OUTPUT (OPEN DRAIN)					
Output Low Voltage, V_{OL}	I_{OL} = 4 mA	–	0.15	0.4	V
Pin Capacitance		–	10	–	pF
High Output Leakage Current, IOH	$\overline{OS}$/$\overline{ALERT}$ Pin Pulled Up to 5.5 V	–	0.1	5	μA
DIGITAL INPUTS (SDA, SCL)					
Input Current	V_{IN} = 0 V to V_{DD}	–	–	1	μA
Input Low Voltage, V_{IL}	V_{DD} = 3.3 V (Note 3)	–	–	0.3 x V_{DD}	V
Input High Voltage, V_{IH}	V_{DD} = 3.3 V (Note 3)	0.7xV_{DD}	–	–	V
SCL, SDA Glitch Rejection	Input Filtering Suppresses Noise Spikes of Less than 50 ns	–	–	50	ns
Pin Capacitance		–	3	–	pF
DIGITAL OUTPUT (SDA) (OPEN DRAIN)					
Output High Current, I_{OH}	V_{OH} = 5 V	–	–	1	μA
Output Low Voltage, V_{OL}	I_{OL} = 3 mA	–	–	0.4	V
Output Capacitance, C_{OUT}		–	3	–	pF

Product parametric performance is indicated in the Electrical Characteristics for the listed test conditions, unless otherwise noted. Product performance may not be indicated by the Electrical Characteristics if operated under different conditions.
3. Guaranteed by characterization, not production tested.

APPLICATION INFORMATION

Functional Description

The NCT375 temperature sensor converts an analog temperature measurement to a digital representation by using an on-chip measurement transistor and a 12 bit Delta-Sigma ADC.

The device includes an open drain $\overline{\text{ALERT}}$ output which can be used to signal that the programmed temperature limit has been exceeded.

The two main modes of operation are normal and shutdown mode. In normal mode the NCT375 performs a new temperature conversion every 80 ms. This new value is then updated to the temperature value register (address 0x00) and also compared to the T_{OS} register limit (default = 80°C). If the temperature value register is read during the conversion sequence the value returned is the previously stored value. A bus read does not affect the conversion that is in progress.

In shutdown mode temperature conversion is disabled and the temperature value register holds the last valid temperature reading. The NCT375 can still be communicated with in this mode as the interface is still active. The device mode is controlled via bit 0 of the configuration register.

While in shutdown mode a conversion can be initiated by writing an arbitrary value to the one-shot register (0x04). This has the effect of powering up the NCT375, performing a conversion, comparing the new temperature with the programmed limit and then going back into shutdown mode.

The $\overline{\text{OS}}/\overline{\text{ALERT}}$ pin can be configured in many ways to allow it to be used in many different system configurations.

The overtemperature output can be configured to operate as a comparator type output (which is self clearing once the temperature has returned below the hysteresis value) or an interrupt type output (which requires the master to read an internal register AND the temperature to return below the hysteresis value before going into an inactive state). The $\overline{\text{ALERT}}$ pin can also be configured as an active high or active low output.

Temperature Measurement Results

The results of the on chip temperature measurements are stored in the temperature value register and compared with the T_{OS} and T_{HYST} limit register.

The temperature value, T_{OS} and T_{HYST} registers are 16 bits wide and have a resolution of 0.0625°C. The data is stored as a 12 bit 2s complement word. The data is left justified, D15 is the MSB and is the sign bit. The four LSBs (D3 to D0) are always 0 as they are not part of the result.

While the ADC of the NCT375 can theoretically measure temperatures in the range of −128°C to 127°C, the NCT375 is guaranteed to measure from −55°C to +125°C.

Table 6 shows the relevant temperature bits for a 12 bit temperature reading. A 2-byte read is required to obtain the full 12 bit temperature reading. If an 8 bit (1°C resolution) reading is required then a single byte read is sufficient.

Table 6. 12-BIT TEMPERATURE DATA FORMAT

Temperature	Binary Value D15 to D4	Hex Value
−55°C	1100 1001 0000	0xC90
−25°C	1110 0111 0000	0xE70
−0.0625°C	1111 1111 1111	0xFFF
0°C	0000 0000 0000	0x000
+0.0625°C	0000 0000 0001	0x001
+25°C	0001 1001 0000	0x190
+75.25°C	0100 1011 0100	0x4B4
+100°C	0110 0100 0000	0x640
+125°C	0111 1101 0000	0x7D0

Temperature Data Conversion

12-bit Temperature Data Format

Positive Temperature = ADC Code (decimal)/16
Example 190h = 400d/16 = +25°C

Negative Temperature = (ADC Code(decimal) − 4096)/16
Example E70h = (3696d − 4096)/16 = −25°C

One-shot Mode

One of the features of the NCT375 is a One-shot Temperature Measurement Mode. This mode is useful if reduced power consumption is a design requirement.

To enable one-shot mode bit 5 of the configuration register needs to be set. Once, enabled, the NCT375 goes immediately into shutdown mode. Here, the current consumption is reduced to a typical value of 3 μA. Writing address 0x04 to the address pointer register initiates a one-shot temperature measurement. This powers up the NCT375, carries out a temperature measurement, and then powers down again. The data written to this register is irrelevant and is not stored. It is the write operation that causes the one-shot conversion.

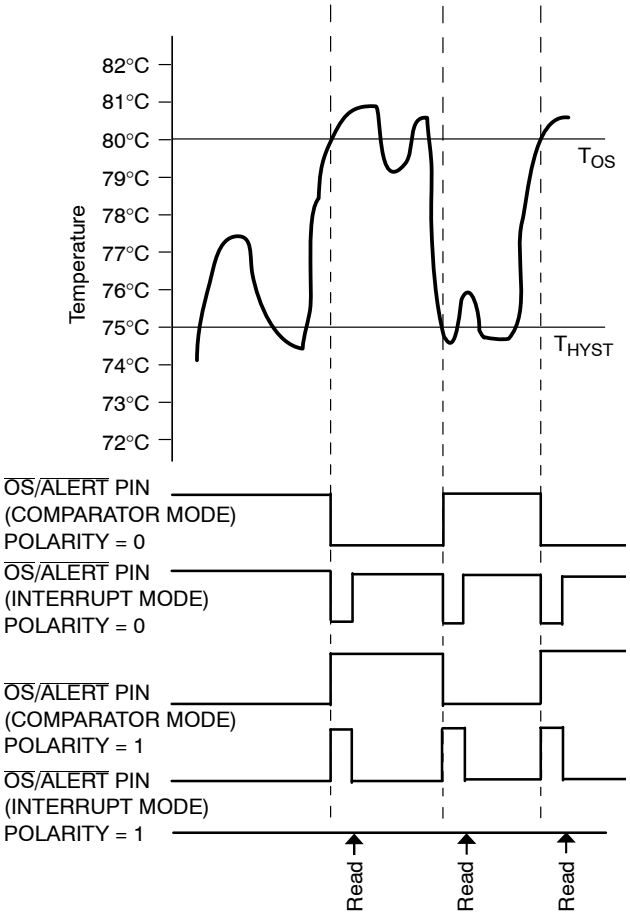

Figure 4. One-shot $\overline{OS}/\overline{ALERT}$ Pin Operation

Fault Queue

A fault is defined as when the temperature exceeds a pre-defined temperature limit. This limit can be programmed in the T_{HYST} and the T_{OS} setpoint registers. Bits 3 and 4 of the configuration register determine the number of faults necessary to trigger the $\overline{OS}/\overline{ALERT}$ pin. Up to six faults can be programmed to prevent false tripping when the NCT375 is used in a noisy temperature environment. In order for the $\overline{OS}/\overline{ALERT}$ output to be set these faults must occur consecutively.

Registers

The NCT375 contains six registers for configuring and reading the teperature: the address pointer register, 4 data registers and a one-shot register. The configuration register, the address pointer register and the one-shot register are all 8 bits wide while the temperature register, T_{HYST} and T_{OS} registers are all 16 bits wide. All registers, except for the temperature register, can be be read from and written to (the temperature register is read only). The power on state and address of each register are listed in Table 9.

Address Pointer Register

The address pointer register is used to select which register is to respond to a read or write operation. The three LSBs (P2, P1 & P0) of this write only register are used to select the appropriate register. On power up this register is loaded with a value of 0x00 and so points to the temperature register. Table 7 shows the bits of the address pointer register and Table 8 shows the pointer address selecting each of the registers available.

Table 7. ADDRESS POINTER REGISTER

	P7	P6	P5	P4	P3	P2	P1	P0
Default	0	0	0	0	0	0	0	0

Table 8. REGISTER ADDRESSES SELECTION

P2	P1	P0	Register Selected
0	0	0	Stored Temperature
0	0	1	Configuration
0	1	0	T_{HYST} Setpoint
0	1	1	T_{OS} Setpoint
1	0	0	One-shot

Table 9. NCT375 REGISTER SET

Register Address	Register Name	Power-on Default Value	
		Hex	°C
0x00 (R)	Stored Temperature Value	0x0000	0
0x01 (R/W)	Configuration	0x00	–
0x02 (R/W)	T_{HYST}	0x4B00	75
0x03 (R/W)	T_{OS}	0x5000	80
0x04 (R/W)	One-shot	0xXX	–

Temperature Register

The temperature measured by the parts internal sensor is stored in this 16-bit read only register. The data is stored in twos complement format with the MSB as the sign bit. The 8 MSBs must be read frist followed by the 8 LSBs.

Table 10. TEMPERATURE VALUE REGISTER

MSB															LSB
D15	D14	D13	D12	D11	D10	D9	D8	D7	D6	D5	D4	D3	D2	D1	D0
0	0	0	0	0	0	0	0	0	0	0	0	X	X	X	X

Configuration Register

This 8-bit read/write register is used to configure the NCT375 into its various modes of operation. The different modes are listed in Table 11 and explained in more detail below.

Table 11. CONFIGURATION REGISTER

Bit	Configuration	Default Value
D7	Reserved	0
D6	Reserved	0
D5	One-shot Mode	0
D4	Fault-queue	0
D3	Fault-queue	0
D2	$\overline{\text{OS}}$/$\overline{\text{ALERT}}$ Pin Polarity	0
D1	Cmp/Int Mode	0
D0	Shutdown Mode	0

D7: Reserved
Write 0 to this bit.

D6: Reserved
Write 0 to this bit.

D5: One-shot Mode
D5 = 0 Part is in normal mode and converting every 60 ms. (Default)
D5 = 1 Setting this bit puts the part into one-shot mode. The part is normally powered down in this mode until the one shot register is written to. Once this register is written to one conversion is performed and the part returns to its shutdown state.

D[4:3]: Fault Queue
D4 D3 These two bits determine how many overtemperature conditions occur before the $\overline{\text{OS}}$/$\overline{\text{Alert}}$ pin is triggered. This helps to prevent false triggering of the output.
0 0 = 1 Fault (Default)
0 1 = 2 Faults
1 0 = 4 Faults
2 1 = 6 Faults

D2: $\overline{\text{OS}}$/$\overline{\text{Alert}}$ pin polarity
This selects the polarity of the $\overline{\text{OS}}$/$\overline{\text{Alert}}$ output pin.
D2 = 0 Output is active low. (Default)
D2 = 1 Output is active high.

D1: Cmp/Int
D1 = 0 Comparator mode. (Default)
D1 = 1 Interrupt mode.

D0: Shutdown
D0 = 0 Normal mode – part is fully powered. (Default)
D0 = 1 Shutdown mode – all circuitry except for the SMBus interface is powered down. Write a 0 to this bit to power up again.

T_{HYST} Register

The T_{HYST} register stores the temperature hysteresis value for the overtemperature output. This value is picked to stop the $\overline{\text{OS}}$/$\overline{\text{Alert}}$ pin from being asserted and de-asserted in noisy temperature environments. This limit is stored in the 16 bit register in twos complement format. The MSB is the temperature sign bit. The 8 MSBs must be read first followed by the 8 LSBs. The default value is +75°C.

Table 12. T_{HYST} REGISTER

MSB															LSB
D15	D14	D13	D12	D11	D10	D9	D8	D7	D6	D5	D4	D3	D2	D1	D0
0	1	0	0	1	0	1	1	0	0	0	0	X	X	X	X

T_{OS} Register

This register stores the temperature limit at which the part asserts an $\overline{\text{OS}}$/$\overline{\text{Alert}}$. Once the measured temperature reaches this value an alert or overtemperature output is generated. The data is stored in twos complement format with the MSB as the sign bit. The 8 MSBs must be read frist followed by the 8 LSBs. The default limit +80°C.

Table 13. T_{OS} REGISTER

MSB															LSB
D15	**D14**	**D13**	**D12**	**D11**	**D10**	**D9**	**D8**	**D7**	**D6**	**D5**	**D4**	**D3**	**D2**	**D1**	**D0**
0	1	0	1	0	0	0	0	0	0	0	0	X	X	X	X

Serial Interface

Control of the NCT375 is carried out via the SMBus/I^{2}C compatible serial interface. The NCT375 is connected to this bus as a slave device, under the control of a master device.

Serial Bus Address

Control of the NCT375 is carried out via the serial bus. The NCT375 is connected to this bus as a slave device under the control of a master device. The NCT375 has a 7-bit serial address. The four MSBs are fixed and set to 1001 while the 3 LSBs can be configured by the user using pins 5, 6 and 7 (A2, A1 and A0). Each of these pins can be configured in one of two ways low or high. This gives eight different address options listed in Table 14 below. The state of these pins is continually sampled and so can be changed after power up.

Table 14. SERIAL BUS ADDRESS OPTIONS

MSBs				LSBs			Address
A6	A5	A4	A3	A2	A1	A0	Hex
1	0	0	1	0	0	0	0x48
1	0	0	1	0	0	1	0x49
1	0	0	1	0	1	0	0x4A
1	0	0	1	0	1	1	0x4B
1	0	0	1	1	0	0	0x4C
1	0	0	1	1	0	1	0x4D
1	0	0	1	1	1	0	0x4E
1	0	0	1	1	1	1	0x4F

The NCT375 also features a SMBus/I^{2}C timeout function whereby the SMBus/I^{2}C interface times out after the specified time when there is no activity on the SDA line. After this time, the NCT375 resets the SDA line back to its idle state (high impedance) and waits for the next start condition.

The serial bus protocol operates as follows:

1. The master initiates data transfer by establishing a start condition, defined as a high to low transition on the serial data line SDA, while the serial clock line SCL remains high. This indicates that an address/data stream is going to follow. All slave peripherals connected to the serial bus respond to the start condition and shift in the next eight bits, consisting of a 7-bit address (MSB first) plus a read/write (R/$\overline{W}$) bit, which determines the direction of the data transfer i.e. whether data is written to, or read from, the slave device. The peripheral with the address corresponding to the transmitted address responds by pulling the data line low during the low period before the ninth clock pulse, known as the acknowledge bit. All other devices on the bus now remain idle while the selected device waits for data to be read from or written to it. If the R/$\overline{W}$ bit is a zero then the master writes to the slave device. If the R/$\overline{W}$ bit is a one then the master reads from the slave device.
2. Data is sent over the serial bus in sequences of nine clock pulses, eight bits of data followed by an acknowledge bit from the receiver of data. Transitions on the data line must occur during the low period of the clock signal and remain stable during the high period, since a low-to-high transition when the clock is high can be interpreted as a stop signal.
3. When all data bytes have been read or written, stop conditions are established. In write mode, the master pulls the data line high during the tenth clock pulse to assert a stop condition. In read mode, the master overrides the acknowledge bit by pulling the data line high during the low period before the ninth clock pulse. This is known as no acknowledge. The master takes the data line low during the low period before the tenth clock pulse, then high during the tenth clock pulse to assert a stop condition.

Any number of bytes of data can be transferred over the serial bus in one operation. However, it is not possible to mix read and write in one operation because the type of operation is determined at the beginning and cannot subsequently be changed without starting a new operation.

Writing Data

There are two types of writes used in the NCT375:

Setting up the Address Pointer Register for a Register Read

To read data from a particular register, the address pointer register must hold the address of the register being read. To configure the address pointer register a single write operation (shown in Figure 5). It consists of the device address followed by the address being written to the address pointer register. This will then be followed by a read operation.

Writing Data to a Register

Due to the different size registers used by the NCT375, there are two types of write operations. One is for the 8 bit wide configuration register and the other for the 16 bit wide limit registers.

Figure 6 shows the sequence required to write to the configuration register. It consists of the device address, the data register being written to and the data being written the selected register.

The two temperature limit registers (T_{HYST} and T_{OS}) are 16 bits wide and require two data bytes to be written to these registers. This sequence is shown in Figure 7. It consists of the device address, the data register being written to and the two data byes being written to the selected register.

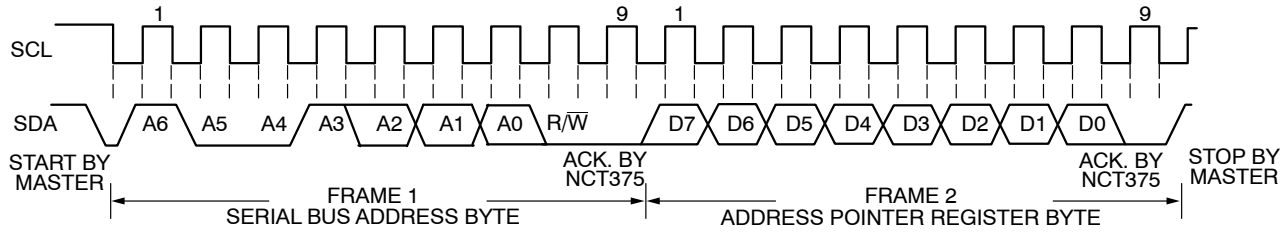

Figure 5. Writing to the Address Pointer Register

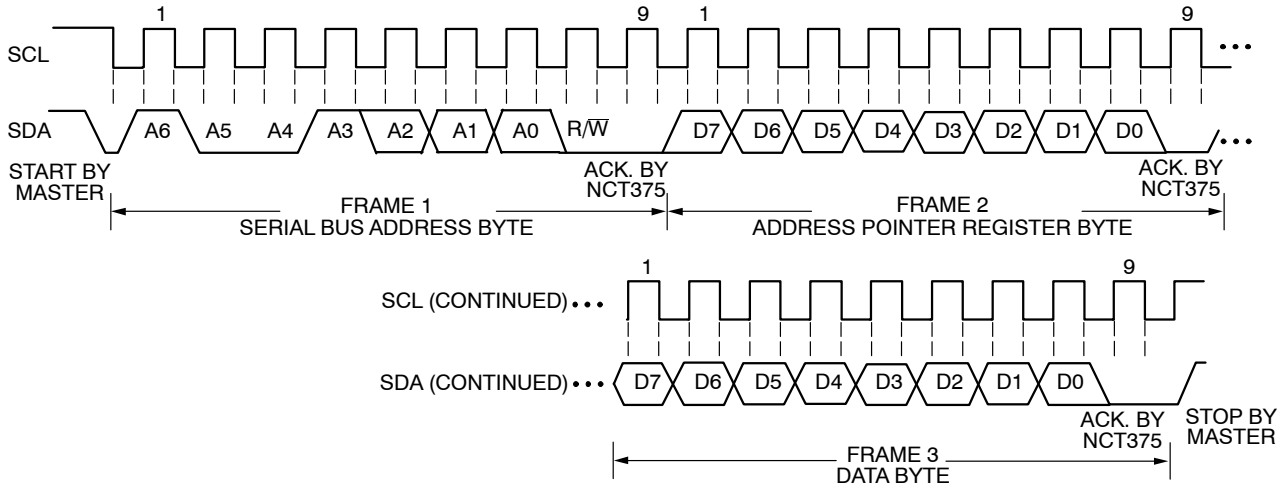

Figure 6. Writing a Register Address to the Address Pointer Register, then Writing a Single Byte of Data to the Configuration Register

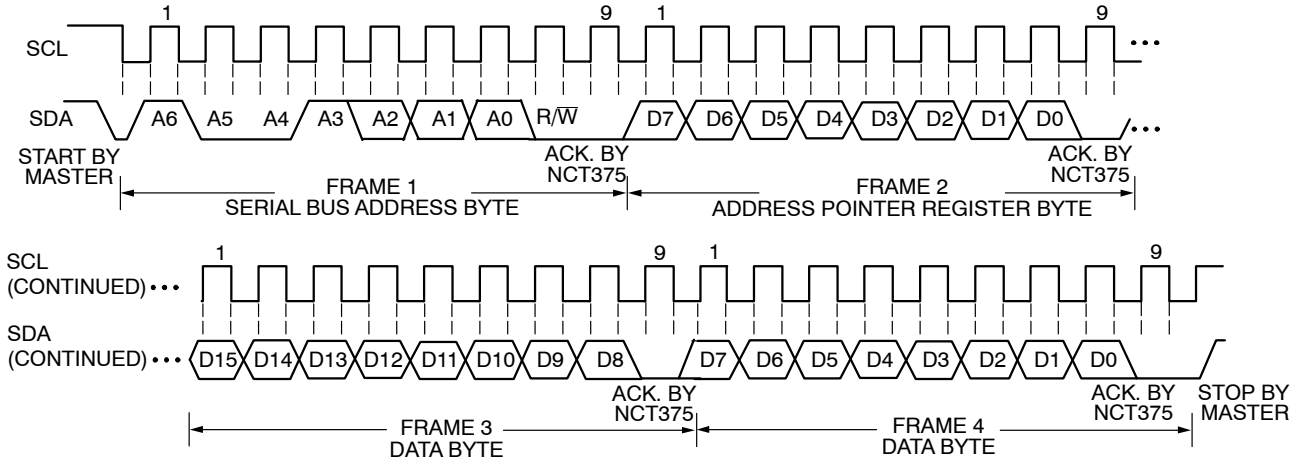

Figure 7. Writing to the Address Pointer Register Followed by Two Bytes of Data to a 16 Bit Limit Register

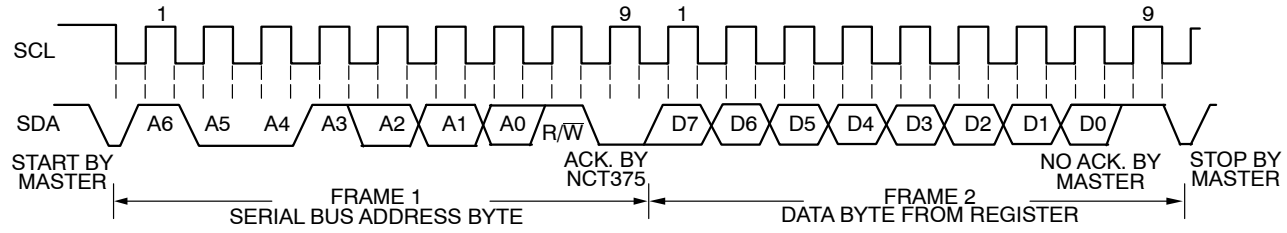

Figure 8. Reading Data from the Configuration Register

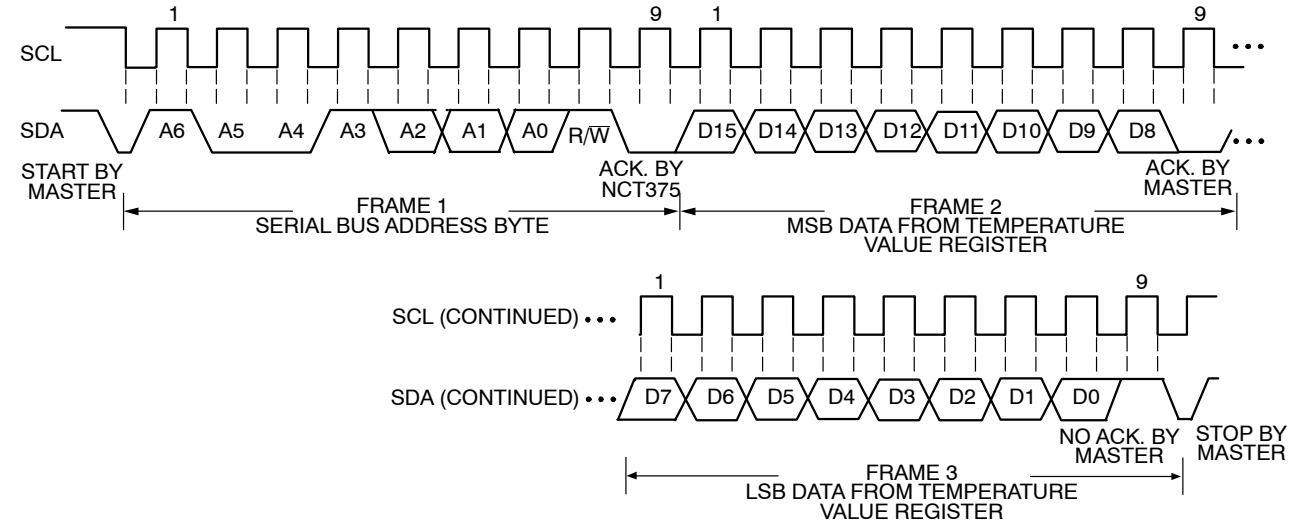

Figure 9. Reading Data from the Temperature Value Register with Preset Pointer Register

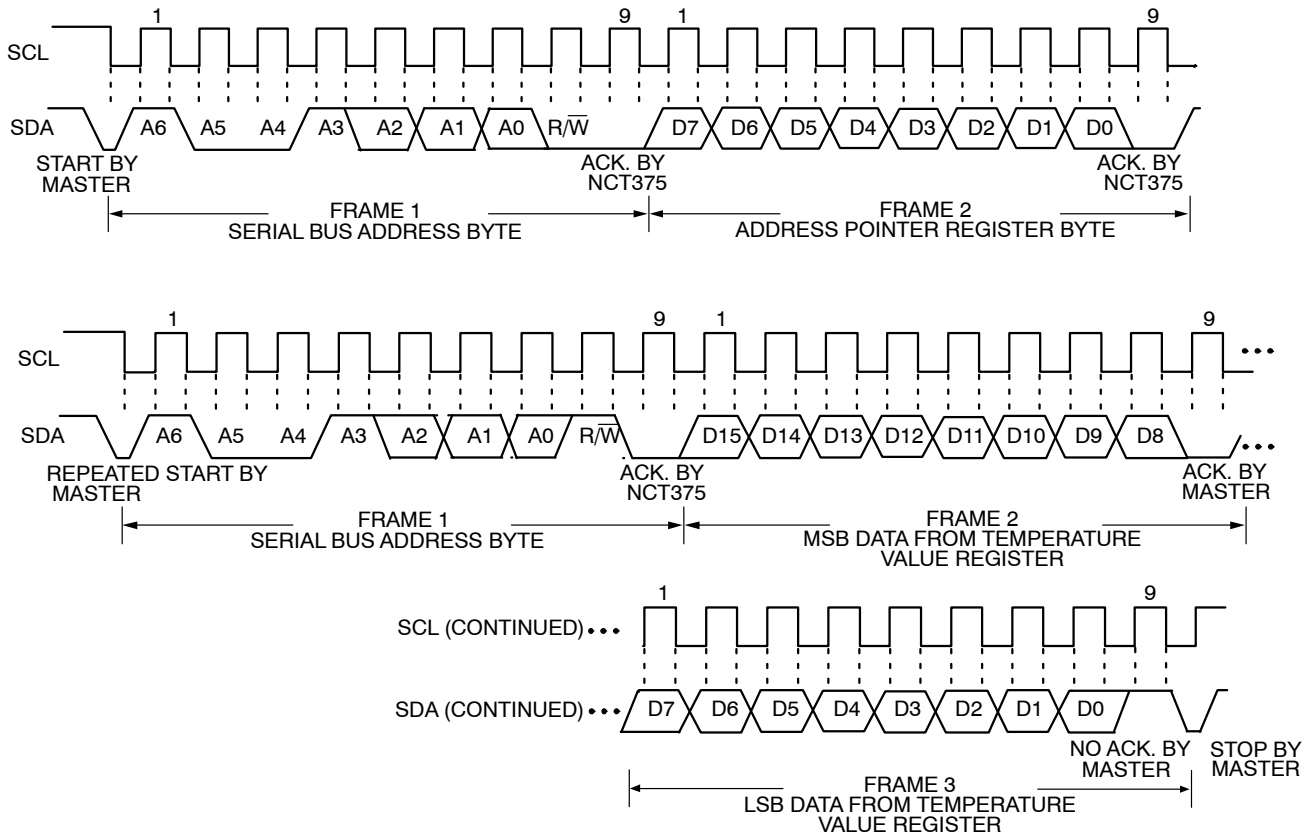

Figure 10. Typical Pointer Set followed by Two Bytes Register Read

Reading Data

Reading data from the NCT375 is done in two different ways depending on the register being read. The configuration register is only 8 bits wide so a single byte read is used for this (shown in Figure 8). This consists of the device address followed by the data from the register.

Reading the data in the temperature value register requires a two byte read (shown in Figure 9). This consists of the device address, followed by two bytes of data from the temperature register (the first byte is the MSB). In both cases the address pointer register of the register being read must be written to prior to performing a read operation.

$\overline{OS}$/$\overline{ALERT}$ Output Overtemperature Modes

The $\overline{OS}$/$\overline{ALERT}$ output pin can operate in two different modes – overtemperature mode and SMBus alert mode. The pin defaults to overtemperature mode on power up. This means that it becomes active when the measured temperature meets or exceeds the limit stored in the T_{OS} setpoint register. At this point it can deal with the event in one of two ways which depends on the mode it is in. The two overtemperature modes are: comparator mode and interrupt mode. Comparator mode is the default mode on power up. More information on comparator and interrupt modes alsong with the SMBus alert mode are explained below.

Comparator Mode

In Comparator Mode, the $\overline{OS}$/$\overline{ALERT}$ pin becomes active when the measured temperature equals or exceeds the limit stored in the T_{OS} setpoint register. The pin returns to its inactive status when the temperature drops below the T_{HYST} setpoint register value.

NOTE: Shutdown mode does not reset the output state for comparator mode.

Interrupt Mode

In the interrupt mode, the $\overline{OS}$/$\overline{ALERT}$ pin becomes active when the temperature equals or exceeds the T_{OS} limit for a consecutive number of faults. It can be reset by performing a read operation on any register in the NCT375. The output can only become active again when the T_{OS} limit has been equalled or exceeded.

Figure 11 shows how both the interrupt and comparator modes operate in relation to the output pin ($\overline{OS}$/$\overline{ALERT}$). It also shows the operation of the polarity bit in the configuration register.

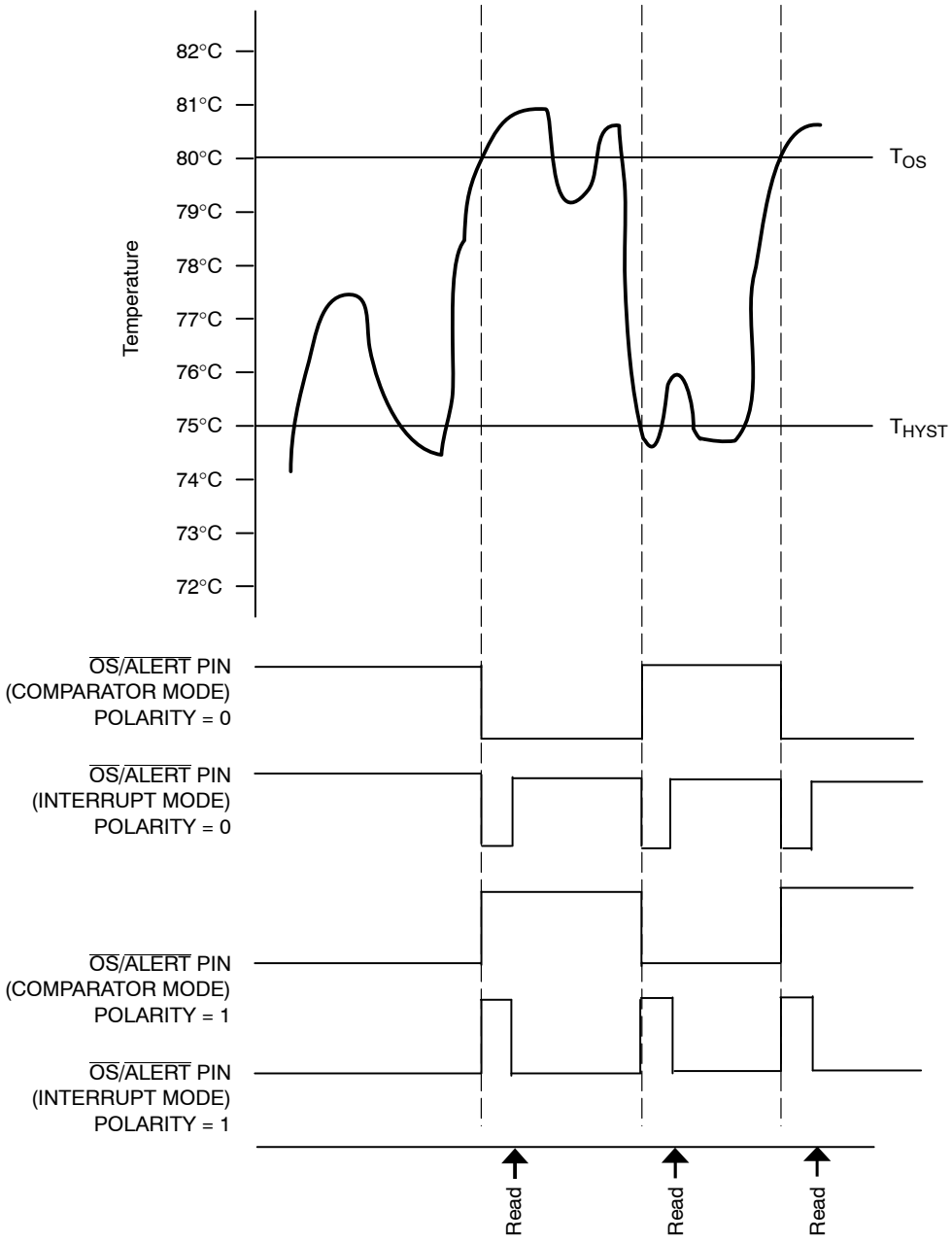

Figure 11. $\overline{\text{OS}}/\overline{\text{ALERT}}$ Output Temperature Response Diagram

Table 15. ORDERING INFORMATION

Model Number	Temperature Range	Temperature Accuracy	Package Description	Package Option†
NCT375DMR2G	−55°C to +125°C	±1°C	Micro8 (Pb−Free)	3,000 / Tape & Reel
NCT375DR2G	−55°C to +125°C	±1°C	SOIC−8 (Pb−Free)	2,500 / Tape & Reel
NCT375MNR2G	−55°C to +125°C	±1°C	DFN8 (Pb−Free)	3,000 / Tape & Reel

†For information on tape and reel specifications, including part orientation and tape sizes, please refer to our Tape and Reel Packaging Specifications Brochure, BRD8011/D.

Micro8 is a trademark of International Rectifier.

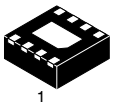

SCALE 4:1

DFN8 2x2, 0.5P
CASE 506AA
ISSUE F

DATE 04 MAY 2016

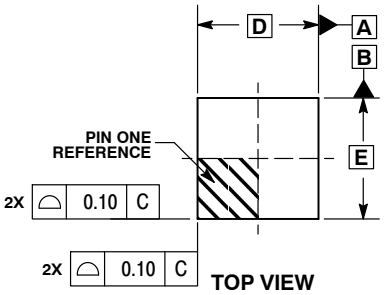

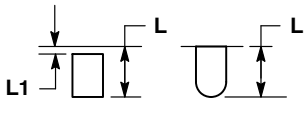

DETAIL A
OPTIONAL CONSTRUCTIONS

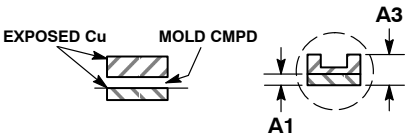

DETAIL B
ALTERNATE CONSTRUCTIONS

NOTES:
1. DIMENSIONING AND TOLERANCING PER ASME Y14.5M, 1994 .
2. CONTROLLING DIMENSION: MILLIMETERS.
3. DIMENSION b APPLIES TO PLATED TERMINAL AND IS MEASURED BETWEEN 0.15 AND 0.20 MM FROM TERMINAL TIP.
4. COPLANARITY APPLIES TO THE EXPOSED PAD AS WELL AS THE TERMINALS.

	MILLIMETERS	
DIM	MIN	MAX
A	0.80	1.00
A1	0.00	0.05
A3	0.20 REF	
b	0.20	0.30
D	2.00 BSC	
D2	1.10	1.30
E	2.00 BSC	
E2	0.70	0.90
e	0.50 BSC	
K	0.30 REF	
L	0.25	0.35
L1	---	0.10

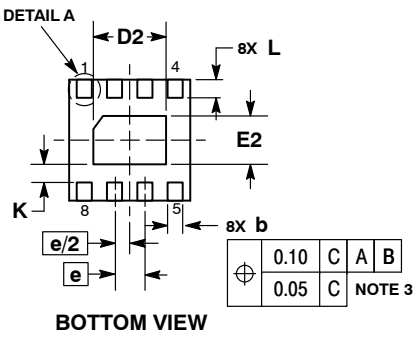

BOTTOM VIEW

RECOMMENDED SOLDERING FOOTPRINT*

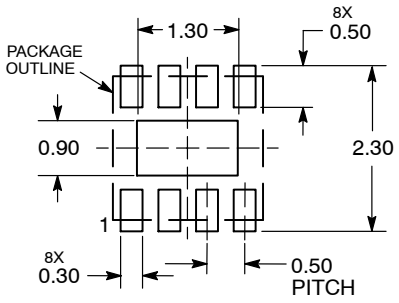

DIMENSIONS: MILLIMETERS

*For additional information on our Pb−Free strategy and soldering details, please download the **onsemi** Soldering and Mounting Techniques Reference Manual, SOLDERRM/D.

GENERIC MARKING DIAGRAM*

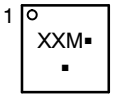

XX = Specific Device Code
M = Date Code
▪ = Pb−Free Device

*This information is generic. Please refer to device data sheet for actual part marking. Pb−Free indicator, “G” or microdot “▪”, may or may not be present. Some products may not follow the Generic Marking.

DOCUMENT NUMBER:	**98AON18658D**	Electronic versions are uncontrolled except when accessed directly from the Document Repository. Printed versions are uncontrolled except when stamped “CONTROLLED COPY” in red.	
DESCRIPTION:	**DFN8, 2.0X2.0, 0.5MM PITCH**		**PAGE 1 OF 1**

onsemi and onsemi are trademarks of Semiconductor Components Industries, LLC dba **onsemi** or its subsidiaries in the United States and/or other countries. **onsemi** reserves the right to make changes without further notice to any products herein. **onsemi** makes no warranty, representation or guarantee regarding the suitability of its products for any particular purpose, nor does **onsemi** assume any liability arising out of the application or use of any product or circuit, and specifically disclaims any and all liability, including without limitation special, consequential or incidental damages. **onsemi** does not convey any license under its patent rights nor the rights of others.

© Semiconductor Components Industries, LLC, 2016

onsemi, , and other names, marks, and brands are registered and/or common law trademarks of Semiconductor Components Industries, LLC dba "**onsemi**" or its affiliates and/or subsidiaries in the United States and/or other countries. **onsemi** owns the rights to a number of patents, trademarks, copyrights, trade secrets, and other intellectual property. A listing of **onsemi**'s product/patent coverage may be accessed at www.onsemi.com/site/pdf/Patent−Marking.pdf. **onsemi** reserves the right to make changes at any time to any products or information herein, without notice. The information herein is provided "as−is" and **onsemi** makes no warranty, representation or guarantee regarding the accuracy of the information, product features, availability, functionality, or suitability of its products for any particular purpose, nor does **onsemi** assume any liability arising out of the application or use of any product or circuit, and specifically disclaims any and all liability, including without limitation special, consequential or incidental damages. Buyer is responsible for its products and applications using **onsemi** products, including compliance with all laws, regulations and safety requirements or standards, regardless of any support or applications information provided by **onsemi**. "Typical" parameters which may be provided in **onsemi** data sheets and/or specifications can and do vary in different applications and actual performance may vary over time. All operating parameters, including "Typicals" must be validated for each customer application by customer's technical experts. **onsemi** does not convey any license under any of its intellectual property rights nor the rights of others. **onsemi** products are not designed, intended, or authorized for use as a critical component in life support systems or any FDA Class 3 medical devices or medical devices with a same or similar classification in a foreign jurisdiction or any devices intended for implantation in the human body. Should Buyer purchase or use **onsemi** products for any such unintended or unauthorized application, Buyer shall indemnify and hold **onsemi** and its officers, employees, subsidiaries, affiliates, and distributors harmless against all claims, costs, damages, and expenses, and reasonable attorney fees arising out of, directly or indirectly, any claim of personal injury or death associated with such unintended or unauthorized use, even if such claim alleges that **onsemi** was negligent regarding the design or manufacture of the part. **onsemi** is an Equal Opportunity/Affirmative Action Employer. This literature is subject to all applicable copyright laws and is not for resale in any manner.

ADDITIONAL INFORMATION

TECHNICAL PUBLICATIONS:
Technical Library: www.onsemi.com/design/resources/technical−documentation
onsemi Website: www.onsemi.com

ONLINE SUPPORT: www.onsemi.com/support
For additional information, please contact your local Sales Representative at www.onsemi.com/support/sales