MicroSpaceXS™ 1.27mm Waterproof Crimp–to–Wire Connector Platform

COMPACT, ROBUST AND VERSATILE CONNECTOR SYSTEM

MicroSpaceXS™ Waterproof connector platform's unique design meets LV214 up to Severity–3 and up to USCAR–T4V2 specifications. These 1.27mm pitch connectors come with a current rating up to 3A per contact, making them ideal for higher power applications. MicroSpaceXS™ waterproof connectors are available in staggered pin configuration and in Wire–to–Wire and Wire–to–Board configurations. These connectors are offered in tin or gold plating.

- LV214 up to Severity–3 and USCAR–T4V2
- Terminal Positioning Assurance (TPA)
- Primary and secondary contact retention
- Connector Positioning Assurance (CPA)

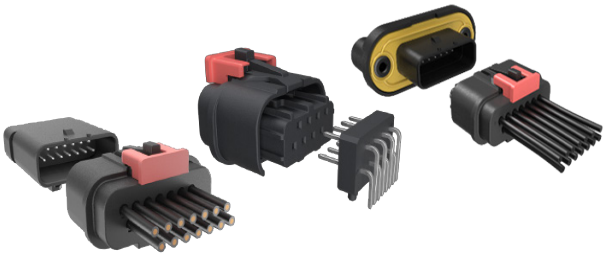

TARGET MARKETS



FEATURES	BENEFITS
▪ Mechanical Connector Position Assurance (CPA)	▪ Ensures proper mating of header and receptacle and avoids unintentional trigger of the latch
▪ Terminal Position Assurance (TPA)	▪ Ensures proper terminal insertion position and retention
▪ Poka–Yoke polarization and color coding	▪ Prevents visual mismatch
▪ Current rating up to 3A per contact	▪ Meets higher power performance requirements
▪ 4N normal force for vibration > 75N connector locking strength	▪ High vibration and locking resistance

MicroSpaceXS™ 1.27mm Waterproof Configuration

TECHNICAL INFORMATION

MATERIAL

- Contact: High current Alloy with optional Tin and Gold plating
- Housing: High temperature thermoplastic, UL94V-0
- Platings:
  - Tin (Sn): 3µ
  - Gold (Au): 0.76µ

ELECTRICAL PERFORMANCE

- Current Rating: 3A
- Voltage Rating: 12V–48V
- Low Level Contact Resistance: <30m
- Insulation Resistance: >100m
- Dielectric Withstanding Voltage: 500VAC
- Temperature Rise: 30°C max.

MECHANICAL PERFORMANCE

- Terminal Insertion Force/Terminal: <10N
- Terminal Retention into Housing: >40N
- Durability:
  - 20 mating cycles for Sn
  - 100 mating cycles for Au

SPECIFICATIONS

- Product Specification MicroSpaceXS™ Waterproof: GS-12-1634
- Product Specification MicrospaceXS™ Pin Header: GS-12-1902
- Packaging Specification: GS-14-2777

ENVIRONMENTAL

- Operating Temperature Range:
  - -40°C to +105°C for Sn
  - -40°C to +150°C for Au
- IP69K
- UL94V-0

APPROVALS AND CERTIFICATIONS

- Tin plating: LV214 Severity-2 & USCAR-T2V2
- Gold plating: LV214 Severity-3 & USCAR-T4V2
- VW75174 – Slow Motion Bending Test
- VW60330 – Crimp specification

PACKAGING

- WTW Header: Bag or Tray
- WTB Header : Tube or Tray
- Pin Header: Tape and Reel
- Receptacle Housing: Bag
- Terminal: Reel

TARGET MARKETS/APPLICATIONS

Lighting
Advanced Driver Assistance Systems (ADAS)
Camera / Sensor
Infotainment
HVAC
Battery Management

Automotive Lighting

PART NUMBERS

Find part number details using the search box on www.amphenol-cs.com

Description	Part Numbers
MicroSpaceXS™ Receptacle Waterproof Top latch	10155470
MicroSpaceXS™ WTW Waterproof header	10155480
MicroSpaceXS™ Wire To Device Pin header horizontal	10167562
MicroSpaceXS™ Terminals Receptacle / Female	10155447
MicroSpaceXS™ Terminals Header / Male	10155449
MicroSpaceXS™ WTW Terminals Header / Male Pin High Current	10168718
MicroSpaceXS™ WTB Waterproof header Panel Mount with insert	10155498
MicroSpaceXS™ WTB Waterproof header Panel Mount W/O insert	10155496
MicroSpaceXS™ WTW Waterproof header Panel Mount with insert	10155493
MicroSpaceXS™ WTW Waterproof header Panel Mount W/O insert	10155490

Accessory	Part Numbers
MicroSpaceXS™ Waterproof Sealing Plug	10155475
MicroSpaceXS™ Waterproof Retainer Extraction Tool Header	10173233

Disclaimer
Please note that the above information is subject to change without notice.

PART NUMBER SELECTOR – HEADER

Find part number details using the search box on www.amphenol-cs.com

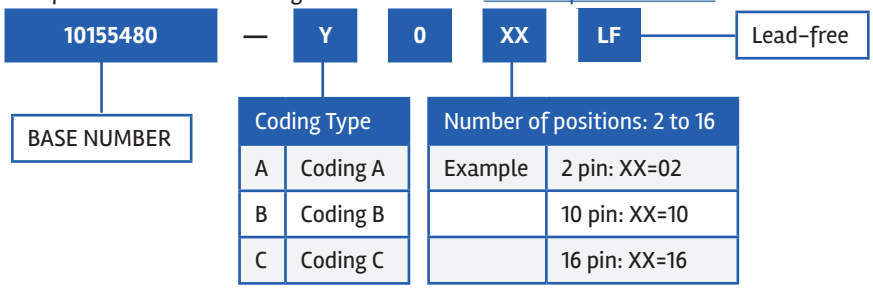

PART NUMBER SELECTOR – RECEPTACLE

Find part number details using the search box on www.amphenol-cs.com

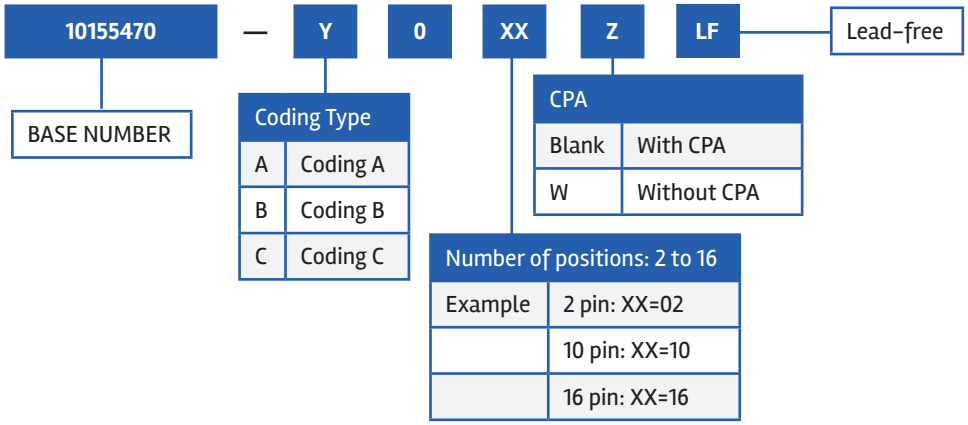

PART NUMBER SELECTOR – TERMINALS

Find part number details using the search box on www.amphenol-cs.com

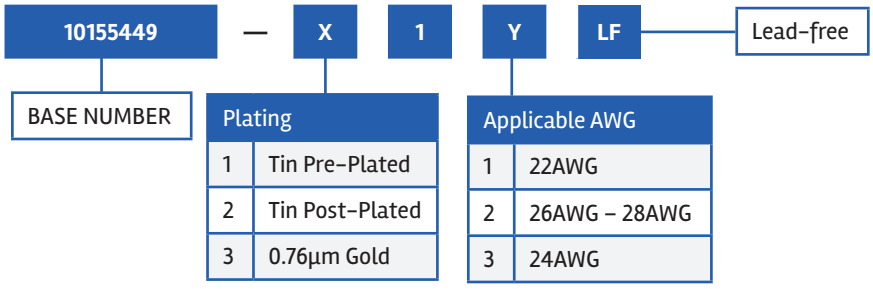

Disclaimer
Please note that the above information is subject to change without notice.

PART NUMBER SELECTOR – PIN HEADER

Find part number details using the search box on www.amphenol-cs.com

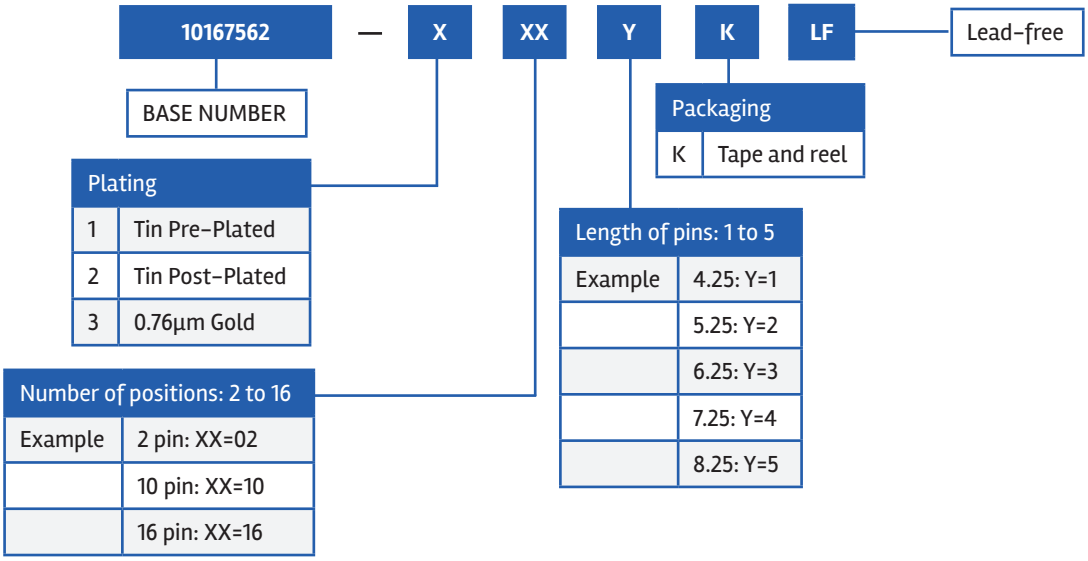

PART NUMBER SELECTOR – RECEPTACLE

Find part number details using the search box on www.amphenol-cs.com

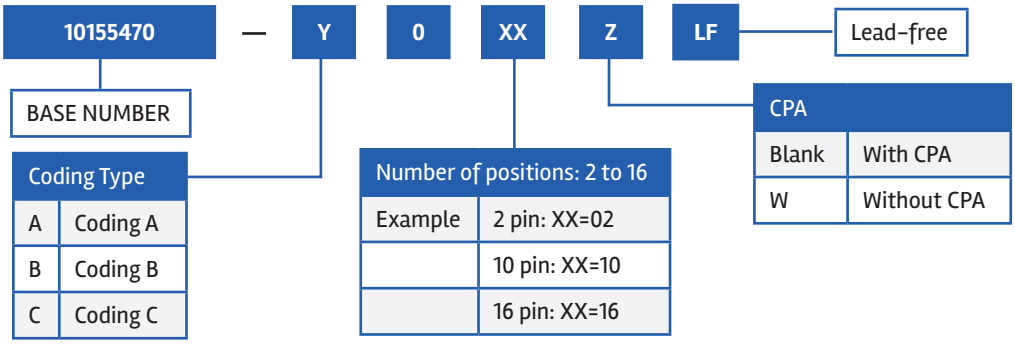

PART NUMBER SELECTOR – TERMINALS

Find part number details using the search box on www.amphenol-cs.com

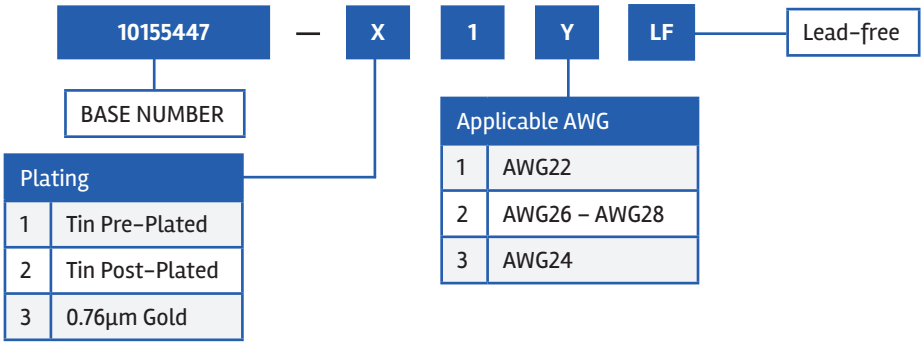

Disclaimer
Please note that the above information is subject to change without notice.

PART NUMBER SELECTOR – HEADER

Find part number details using the search box on www.amphenol-cs.com

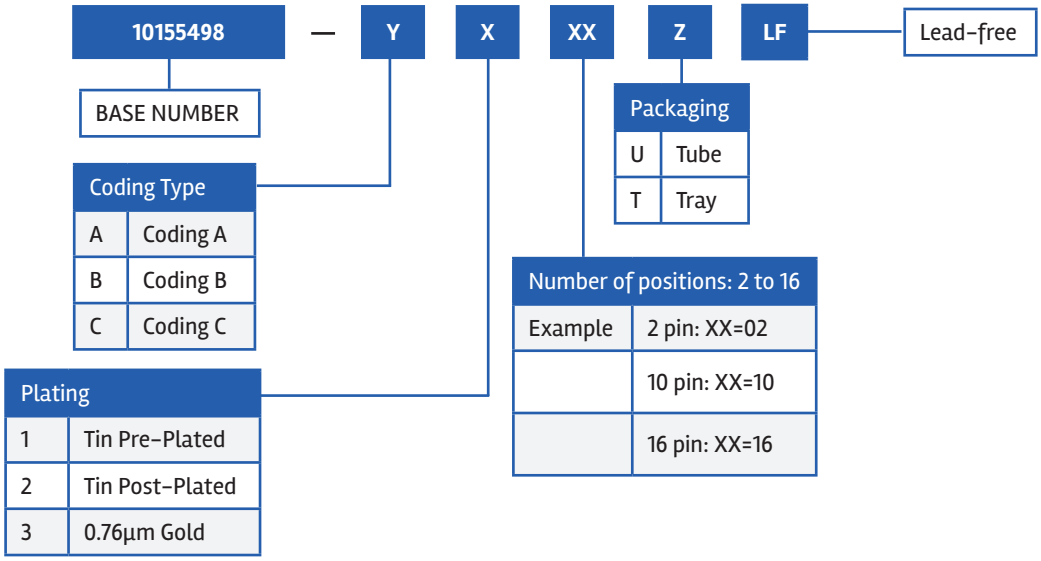

PART NUMBER SELECTOR – RECEPTACLE

Find part number details using the search box on www.amphenol-cs.com

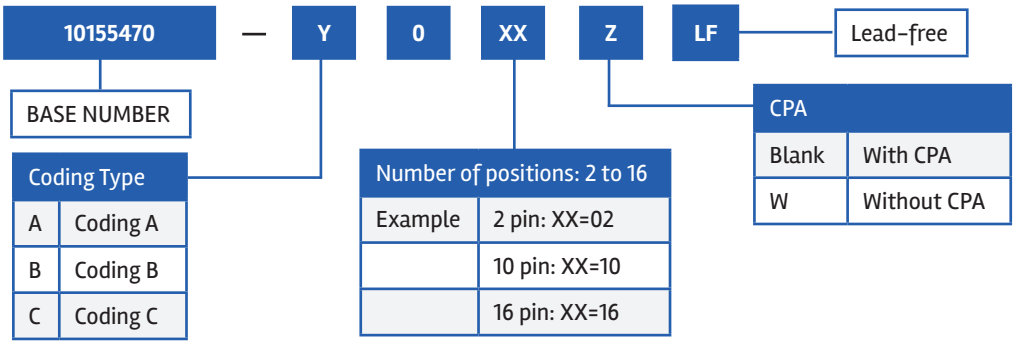

PART NUMBER SELECTOR – TERMINALS

Find part number details using the search box on www.amphenol-cs.com

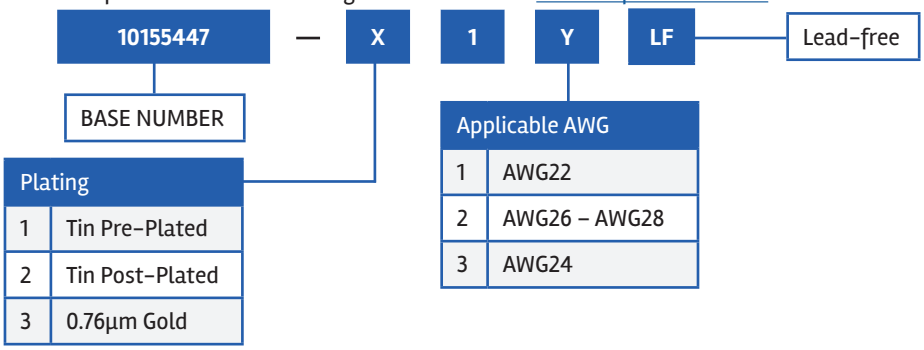

BASICSMSWP1270425EA4

Disclaimer
Please note that the above information is subject to change without notice.