Data sheet



A3M60B-BDPB013x13

A3M60

ABSOLUTE ENCODERS

SICK
Sensor Intelligence.



Illustration may differ

Ordering information

Type	part no.
A3M60B-BDPB013x13	1038824

Other models and accessories ➜ www.sick.com/A3M60

Detailed technical data

Safety-related parameters

$MTTF_D$ (mean time to dangerous failure)	60 years (EN ISO 13849-1) [1]

[1] This product is a standard product and does not constitute a safety component as defined in the Machinery Directive. Calculation based on nominal load of components, average ambient temperature 40 °C, frequency of use 8760 h/a. All electronic failures are considered hazardous. For more information, see document no. 8015532.

Performance

Number of steps per revolution (max. resolution)	8,192 (13 bit)
Number of revolutions	8,192 (13 bit)
Max. resolution (number of steps per revolution x number of revolutions)	13 bit x 13 bit (8,192 x 8,192)
Error limits G	0.5 ° (at room temperature) [1]
Repeatability standard deviation σ_r	0.25 ° (at room temperature) [2]

[1] In accordance with DIN ISO 1319-1, position of the upper and lower error limit depends on the installation situation, specified value refers to a symmetrical position, i.e. deviation in upper and lower direction is the same.
[2] In accordance with DIN ISO 55350-13; 68.3% of the measured values are inside the specified area.

Interfaces

Communication interface	PROFIBUS DP
Communication Interface detail	DPV0
Data transmission rate (baud rate)	≤ 12 MBaud
Initialization time	Approx. 1 s
Parameterising data	Number of steps per revolution Number of revolutions PRESET Counting direction
Bus termination	DIP switch

Electronics

Connection type	Male connector, 2x, M12, 5-pin, axial Female connector, 1x, M12, 5-pin, axial
Supply voltage	10 ... 32 V

Power consumption	≤ 1.5 W
Reverse polarity protection	✓

Mechanics

Mechanical design	Blind hollow shaft
Shaft diameter	10 mm
Characteristics of the shaft	Front clamp
Weight	0.28 kg
Shaft material	Stainless steel
Flange material	Aluminum
Housing material	Aluminum
Start up torque	1 Ncm (+20 °C)
Operating torque	0.8 Ncm (+20 °C)
Permissible movement static	± 0.3 mm (radial) ± 0.5 mm (axial)
Permissible movement dynamic	± 0.1 mm (radial) ± 0.2 mm (axial)
Operating speed	≤ 9,000 min^{-1} [1]
Bearing lifetime	3.0 x 10^9 revolutions
Angular acceleration	≤ 500,000 rad/s^2

[1] Self warming 45 K at maximum operating speed.

Ambient data

EMC	According to EN 61000-6-2 and EN 61000-6-3
Enclosure rating	IP65, shaft side (IEC 60529) IP67, housing side (IEC 60529) [1]
Permissible relative humidity	95 % (Condensation not permitted)
Operating temperature range	–10 °C ... +70 °C
Storage temperature range	–40 °C ... +100 °C
Resistance to shocks	80 g, 6 ms (EN 60068-2-27)
Resistance to vibration	30 g, 10 Hz ... 2,000 Hz (EN 60068-2-6)

[1] With mating connector fitted.

Classifications

ECLASS 5.0	27270502
ECLASS 5.1.4	27270502
ECLASS 6.0	27270590
ECLASS 6.2	27270590
ECLASS 7.0	27270502
ECLASS 8.0	27270502
ECLASS 8.1	27270502
ECLASS 9.0	27270502
ECLASS 10.0	27270502
ECLASS 11.0	27270502

ECLASS 12.0	27270502
ETIM 5.0	EC001486
ETIM 6.0	EC001486
ETIM 7.0	EC001486
ETIM 8.0	EC001486
UNSPSC 16.0901	41112113

Certificates

EU declaration of conformity	✓
UK declaration of conformity	✓
ACMA declaration of conformity	✓
Moroccan declaration of conformity	✓
China-RoHS	✓
cULus certificate	✓
Information according to Art. 3 of Data Act (Regulation EU 2023/2854)	✓

Dimensional drawing

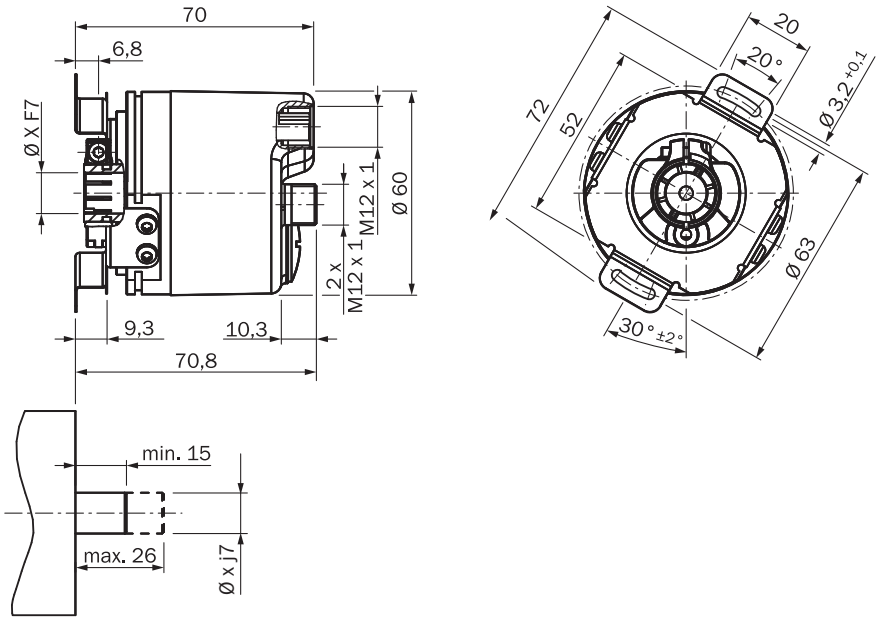

Dimensions in mm (inch)

PIN assignment

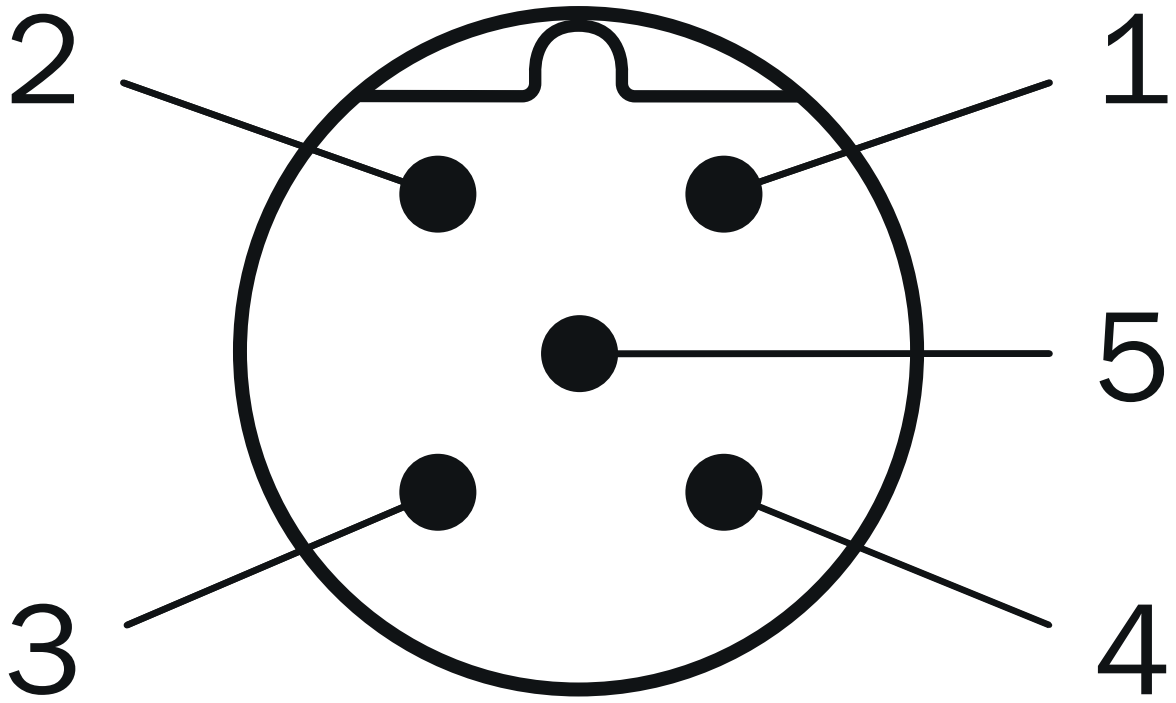

PIN	PROFIBUS IN	PROFIBUS OUT	Supply voltage
1	Not assigned	+5 V2P5[1)]	Operating voltage
2	PROFIBUSDataA	PROFIBUSDataA	Not assigned
3	Not assigned	0 V (2M) [1)]	Ground (0 V)
4	PROFIBUSDataB	PROFIBUSDataB	Not assigned
5	Screen	Screen	Not assigned
[1)]External connection to the bus	–	–	–

PIN assignment

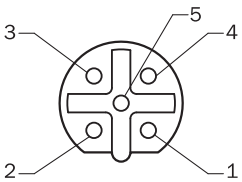

PIN	PROFIBUS IN	PROFIBUS OUT	Supply voltage
1	Not assigned	+5 V2P5[1)]	Operating voltage
2	PROFIBUSDataA	PROFIBUSDataA	Not assigned
3	Not assigned	0 V (2M) [1)]	Ground (0 V)

PIN	PROFIBUS IN	PROFIBUS OUT	Supply voltage
4	PROFIBUSDataB	PROFIBUSDataB	Not assigned
5	Screen	Screen	Not assigned
[1]External connection to the bus	–	–	–

PIN assignment

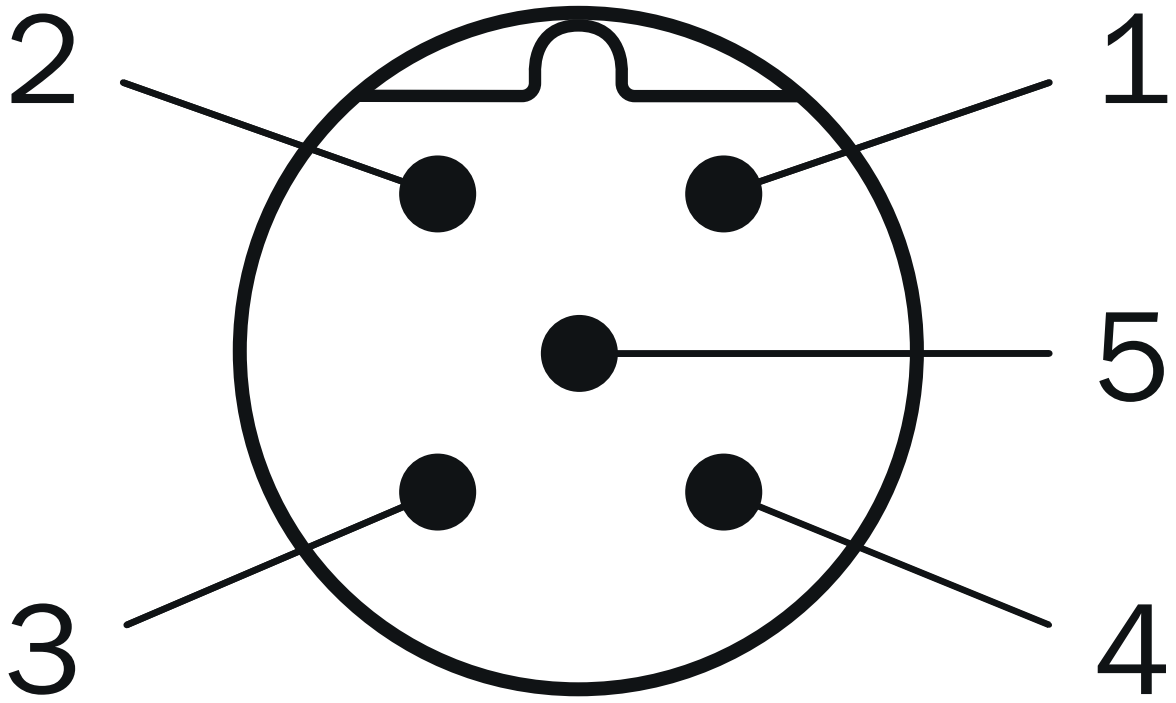

PIN	PROFIBUS IN	PROFIBUS OUT	Supply voltage
1	Not assigned	+5 V2P5[1]	Operating voltage
2	PROFIBUSDataA	PROFIBUSDataA	Not assigned
3	Not assigned	0 V (2M) [1]	Ground (0 V)
4	PROFIBUSDataB	PROFIBUSDataB	Not assigned
5	Screen	Screen	Not assigned
[1]External connection to the bus	–	–	–

Recommended accessories

Other models and accessories ➜ www.sick.com/A3M60

	Brief description	Type	part no.
connectors and cables			
	• **Connection type head A:** Female connector, M12, 5-pin, straight, B-coded • **Connection type head B:** Male connector, M12, 5-pin, straight, B-coded • **Signal type:** Fieldbus, PROFIBUS DP • **Cable:** 10 m, 2-wire, PUR, halogen-free • **Description:** Fieldbus, twisted pair, shieldedPROFIBUS DP • **Note:** Wire shield Al-Pt film, overall shield C-screen tin-plated • **Application:** Zones with oils and lubricants, Drag chain operation	DSL-1205-G10MQ	6032640
	• **Connection type head A:** Flying leads • **Connection type head B:** Flying leads • **Signal type:** PROFIBUS DP • **Items supplied:** By the meter • **Cable:** 2-wire, PUR • **Description:** PROFIBUS DP, shielded	LTG-2102-MW	6021355
	• **Connection type head A:** Male connector, M12, 4-pin, straight, B-coded • **Signal type:** PROFIBUS DP • **Description:** PROFIBUS DP, terminal resistor	STE-END-Q	6021156
	• **Connection type head A:** Male connector, M12, 5-pin, straight, B-coded • **Signal type:** PROFIBUS DP • **Description:** PROFIBUS DP, shielded • **Connection systems:** Screw-type terminals • **Permitted cross-section:** ≤ 0.75 mm²	STE-1205-GQ	6021354
	• **Connection type head A:** Female connector, M12, 5-pin, straight, B-coded • **Signal type:** PROFIBUS DP • **Description:** PROFIBUS DP, shielded • **Connection systems:** Screw-type terminals • **Permitted cross-section:** ≤ 0.75 mm²	DOS-1205-GQ	6021353
	• **Connection type head A:** Female connector, M12, 5-pin, angled, B-coded • **Signal type:** PROFIBUS DP • **Description:** PROFIBUS DP, shielded • **Connection systems:** Spring-cage connection • **Permitted cross-section:** 0.14 mm² ... 0.5 mm²	DOS-1205-WQ	6041429
	• **Connection type head A:** Male connector, M12, 5-pin, angled, B-coded • **Signal type:** PROFIBUS DP • **Description:** PROFIBUS DP, shielded • **Connection systems:** Spring-cage connection • **Permitted cross-section:** 0.14 mm² ... 0.5 mm²	STE-1205-WQ	6041428
	• **Connection type head A:** Female connector, M12, 5-pin, angled, A-coded • **Connection type head B:** Flying leads • **Signal type:** Sensor/actuator cable • **Cable:** 5 m, 2-wire, PUR, halogen-free • **Description:** Sensor/actuator cable, unshielded • **Note:** Voltage supply • **Application:** Zones with oils and lubricants	DOL-1202-W05MC	6042067
	• **Connection type head A:** Female connector, M12, 5-pin, angled, A-coded • **Connection type head B:** Flying leads • **Signal type:** Sensor/actuator cable • **Cable:** 10 m, 2-wire, PUR, halogen-free • **Description:** Sensor/actuator cable, unshielded • **Note:** Voltage supply • **Application:** Zones with oils and lubricants	DOL-1202-W10MC	6042068
	• **Items supplied:** 1 x female connector M12, 4-pin, angled, 1 x female connector M12, 5-pin, angled, male connector M12, 5-pin, angled, cable? • **Description:** Unshielded • **Note:** Set of connectors	DOS-3XM12-W	2058177
	• **Connection type head A:** Female connector, M12, 5-pin, straight, A-coded • **Connection type head B:** Flying leads • **Signal type:** Sensor/actuator cable • **Cable:** 5 m, 5-wire, PUR, halogen-free • **Description:** Sensor/actuator cable, shielded	YF2A25-050UB6XLEAX	2095733

	Brief description	Type	part no.
	• **Application:** Uncontaminated zones, Zones with oils and lubricants, Robot, Drag chain operation		
	• **Connection type head A:** Female connector, M12, 5-pin, straight, A-coded • **Connection type head B:** Flying leads • **Signal type:** Sensor/actuator cable • **Cable:** 10 m, 5-wire, PUR, halogen-free • **Description:** Sensor/actuator cable, shielded • **Application:** Uncontaminated zones, Zones with oils and lubricants, Robot, Drag chain operation	YF2A25-100UB6XLEAX	2095734
	• **Connection type head A:** Female connector, M12, 5-pin, straight, A-coded • **Connection type head B:** Flying leads • **Signal type:** Sensor/actuator cable • **Cable:** 20 m, 5-wire, PUR, halogen-free • **Description:** Sensor/actuator cable, shielded • **Application:** Uncontaminated zones, Zones with oils and lubricants, Robot, Drag chain operation	YF2A25-200UB6XLEAX	2095738
	• **Connection type head A:** Female connector, M12, 5-pin, angled, A-coded • **Description:** Unshielded • **Connection systems:** Screw-type terminals • **Permitted cross-section:** ≤ 0.75 mm²	DOS-1205-W	6009720
	• **Connection type head A:** Female connector, M12, 5-pin, straight, A-coded • **Description:** Unshielded • **Connection systems:** Screw-type terminals • **Permitted cross-section:** ≤ 0.75 mm²	DOS-1205-G	6009719
	• **Connection type head A:** Male connector, M12, 2-pin, straight, B-coded • **Connection type head B:** Flying leads • **Signal type:** Fieldbus, PROFIBUS DP • **Cable:** 15 m, 2-wire, PUR, halogen-free • **Description:** Fieldbus, shieldedPROFIBUS DP • **Application:** Drag chain operation, Zones with oils and lubricants	YM2B22-150P-B1XLEAX	2106276
	• **Connection type head A:** Male connector, M12, 2-pin, angled, B-coded • **Connection type head B:** Flying leads • **Signal type:** Fieldbus, PROFIBUS DP • **Cable:** 5 m, 2-wire, PUR, halogen-free • **Description:** Fieldbus, shieldedPROFIBUS DP • **Application:** Drag chain operation, Zones with oils and lubricants	YN2B22-050P-B1XLEAX	2106277
	• **Connection type head A:** Female connector, M12, 2-pin, angled, B-coded • **Connection type head B:** Flying leads • **Signal type:** Fieldbus, PROFIBUS DP • **Cable:** 5 m, 2-wire, PUR, halogen-free • **Description:** Fieldbus, shieldedPROFIBUS DP • **Application:** Drag chain operation, Zones with oils and lubricants	YG2B22-050P-B1XLEAX	2106274
	• **Connection type head A:** Female connector, M12, 2-pin, angled, B-coded • **Connection type head B:** Flying leads • **Signal type:** Fieldbus, PROFIBUS DP • **Cable:** 10 m, 2-wire, PUR, halogen-free • **Description:** Fieldbus, shieldedPROFIBUS DP • **Application:** Drag chain operation, Zones with oils and lubricants	YG2B22-100P-B1XLEAX	2106275
	• **Connection type head A:** Male connector, M12, 2-pin, angled, B-coded • **Connection type head B:** Flying leads • **Signal type:** Fieldbus, PROFIBUS DP • **Cable:** 10 m, 2-wire, PUR, halogen-free • **Description:** Fieldbus, shieldedPROFIBUS DP • **Application:** Drag chain operation, Zones with oils and lubricants	YN2B22-100P-B1XLEAX	2106278
	• **Connection type head A:** Male connector, M12, 2-pin, straight, B-coded • **Connection type head B:** Flying leads • **Signal type:** Fieldbus, PROFIBUS DP • **Cable:** 5 m, 2-wire, PUR, halogen-free • **Description:** Fieldbus, shieldedPROFIBUS DP • **Application:** Drag chain operation, Zones with oils and lubricants	YM2B22-050P-B1XLEAX	2106270
	• **Connection type head A:** Male connector, M12, 2-pin, straight, B-coded • **Connection type head B:** Flying leads • **Signal type:** Fieldbus, PROFIBUS DP • **Cable:** 10 m, 2-wire, PUR, halogen-free • **Description:** Fieldbus, shieldedPROFIBUS DP • **Application:** Drag chain operation, Zones with oils and lubricants	YM2B22-100P-B1XLEAX	2106271
	• **Connection type head A:** Female connector, M12, 2-pin, straight, B-coded • **Connection type head B:** Flying leads • **Signal type:** Fieldbus, PROFIBUS DP • **Cable:** 10 m, 2-wire, PUR, halogen-free • **Description:** Fieldbus, shieldedPROFIBUS DP	YF2B22-100P-B1XLEAX	2106269

	Brief description	Type	part no.
	• **Application:** Drag chain operation, Zones with oils and lubricants		
	• **Connection type head A:** Female connector, M12, 2-pin, straight, B-coded • **Connection type head B:** Flying leads • **Signal type:** Fieldbus, PROFIBUS DP • **Cable:** 15 m, 2-wire, PUR, halogen-free • **Description:** Fieldbus, shieldedPROFIBUS DP • **Application:** Drag chain operation, Zones with oils and lubricants	YF2B22-150P-B1XLEAX	2106272
	• **Connection type head A:** Female connector, M12, 2-pin, straight, B-coded • **Connection type head B:** Flying leads • **Signal type:** Fieldbus, PROFIBUS DP • **Cable:** 20 m, 2-wire, PUR, halogen-free • **Description:** Fieldbus, shieldedPROFIBUS DP • **Application:** Drag chain operation, Zones with oils and lubricants	YF2B22-200P-B1XLEAX	2106273
	• **Connection type head A:** Female connector, M12, 2-pin, straight, B-coded • **Connection type head B:** Flying leads • **Signal type:** Fieldbus, PROFIBUS DP • **Cable:** 5 m, 2-wire, PUR, halogen-free • **Description:** Fieldbus, shieldedPROFIBUS DP • **Application:** Drag chain operation, Zones with oils and lubricants	YF2B22-050P-B1XLEAX	2121936
	• **Connection type head A:** Female connector, M12, 5-pin, straight, A-coded • **Connection type head B:** Flying leads • **Signal type:** Sensor/actuator cable • **Cable:** 2 m, 5-wire, PUR, halogen-free • **Description:** Sensor/actuator cable, shielded • **Application:** Uncontaminated zones, Zones with oils and lubricants, Robot, Drag chain operation	YF2A25-020UB6XLEAX	2145583
	• **Connection type head A:** Female connector, M12, 5-pin, straight, A-coded • **Connection type head B:** Flying leads • **Signal type:** Sensor/actuator cable • **Cable:** 1 m, 5-wire, PUR, halogen-free • **Description:** Sensor/actuator cable, shielded • **Application:** Uncontaminated zones, Zones with oils and lubricants, Robot, Drag chain operation	YF2A25-010UB6XLEAX	2145582
	• **Connection type head A:** Female connector, M12, 5-pin, straight, A-coded • **Connection type head B:** Flying leads • **Signal type:** Sensor/actuator cable • **Cable:** 0.6 m, 5-wire, PUR, halogen-free • **Description:** Sensor/actuator cable, shielded • **Application:** Uncontaminated zones, Zones with oils and lubricants, Robot, Drag chain operation	YF2A25-C60UB6XLEAX	2145581

SICK AT A GLANCE

SICK is one of the leading manufacturers of intelligent sensors and sensor solutions for industrial applications. A unique range of products and services creates the perfect basis for controlling processes securely and efficiently, protecting individuals from accidents and preventing damage to the environment.

We have extensive experience in a wide range of industries and understand their processes and requirements. With intelligent sensors, we can deliver exactly what our customers need. In application centers in Europe, Asia and North America, system solutions are tested and optimized in accordance with customer specifications. All this makes us a reliable supplier and development partner.

Comprehensive services complete our offering: SICK LifeTime Services provide support throughout the machine life cycle and ensure safety and productivity.

For us, that is “Sensor Intelligence.”

WORLDWIDE PRESENCE:

Contacts and other locations –www.sick.com