© 2025 TE Connectivity. All Rights Reserved.

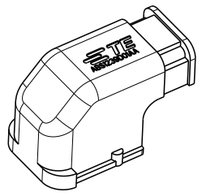

SCALE 1:1

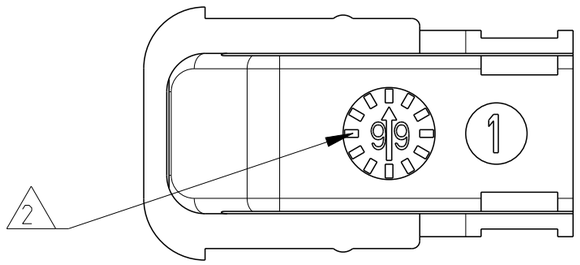

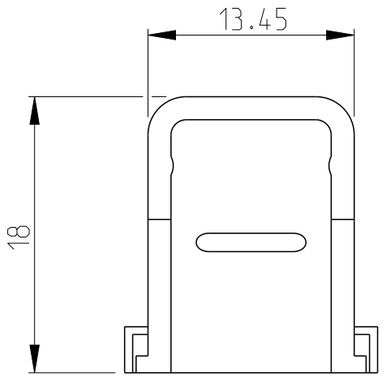

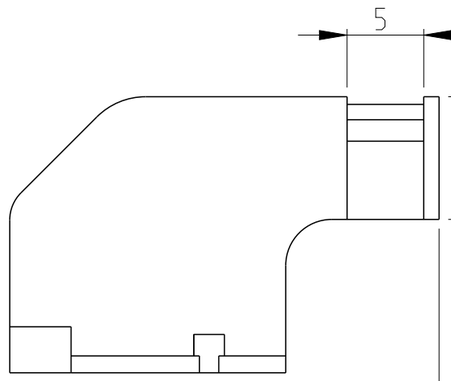

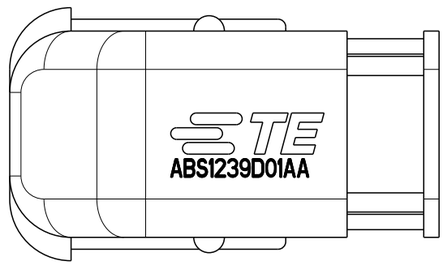

REVISIONS

P	LTR	DESCRIPTION	DATE	DWN	APVD
	A	UPDATE	02FEB2005	TC	YP
	B	UPDATE AND CLARIFICATION	26JUL2005	TC	YP
	C	CHANGE LOGO AND TOLERANCE ON DIM	26JUL2013	JT	YP
	D	ADD ABS NUMBER - ABS1239D01AA	13MAY2025	PS	TA

NOTES:

1 MATERIAL: HIGH TEMPERATURE 20% GF PEI, BLACK.

2 DATE CODE AND MOLD CAVITY.

3 FITS CONNECTOR SERIES 15777134-X.

1577136-1

PART NUMBER

THIS DRAWING IS A CONTROLLED DOCUMENT.

DIMENSIONS: mm

TOLERANCES UNLESS OTHERWISE SPECIFIED:

0 PLC	±0.3
1 PLC	±0.3
2 PLC	±0.3
3 PLC	±
4 PLC	±
ANGLES	±1°

MATERIAL 1 -

FINISH -

DWN	Thierry CORRIOU 16SEP2004
CHK	Yves PETRONIN 16SEP2004
APVD	Miguel FURIO 16SEP2004
PRODUCT SPEC	108-15349
APPLICATION SPEC	114-15121
WEIGHT	2,3 g

TE Connectivity

NAME PROTECTING COVER, FLOATING CONNECTOR

SIZE	CAGE CODE	DRAWING NO	RESTRICTED TO
A3	00779	C-1577136	-

CUSTOMER DRAWING | SCALE 5:2 | SHEET 1 OF 1 | REV D