Data sheet

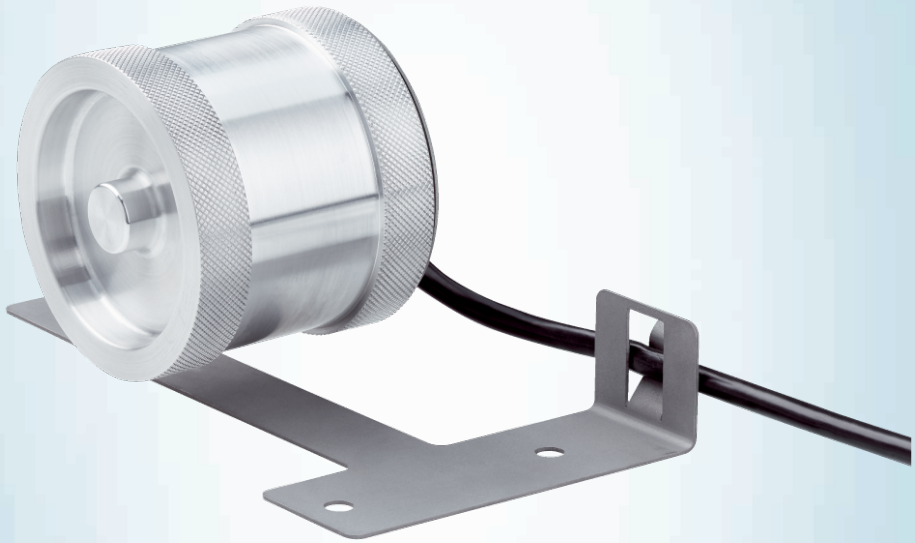

# DKV60E-21EPA0004

## DKV60

MEASURING WHEEL ENCODERS

SICK
Sensor Intelligence.

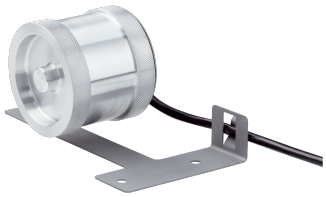

Illustration may differ

## Ordering information

| Type | part no. |
|---|---|
| DKV60E-21EPA0004 | 1119165 |

Other models and accessories ➜ www.sick.com/DKV60

## Detailed technical data

### Safety-related parameters

| | |
|---|---|
| **$MTTF_D$ (mean time to dangerous failure)** | 600 years (EN ISO 13849-1) [1] |

[1] This product is a standard product and does not constitute a safety component as defined in the Machinery Directive. Calculation based on nominal load of components, average ambient temperature 40 °C, frequency of use 8760 h/a. All electronic failures are considered hazardous. For more information, see document no. 8015532.

### Performance

| | |
|---|---|
| **Pulses per revolution** | 4 |
| **Resolution in pulses/mm** | 0.02 |
| **Measuring increment (resolution in mm/pulse)** | 50 |
| **Measuring step deviation** | ± 18°, / pulses per revolution |
| **Error limits** | ± 0.5 mm/m, subject to the measuring wheel (wheel + surface) |
| **Duty cycle** | ≤ 0.5 ± 5 % |
| **Initialization time** | ≤ 3 ms |

### Interfaces

| | |
|---|---|
| **Communication interface** | Incremental |
| **Communication Interface detail** | HTL / Push pull |
| **Number of signal channels** | 6-channel |

### Electrical data

| | |
|---|---|
| **Operating power consumption (no load)** | 50 mA |
| **Connection type** | Cable, 8-wire, with male connector, M12, 8-pin, universal, 1.5 m |
| **Supply voltage** | 10 V ... 30 V |
| **Load current max.** | 30 mA |
| **Maximum output frequency** | ≤ 300 kHz |
| **Reference signal, number** | 1 |
| **Reference signal, position** | 90°, electric, logically gated with A and B |
| **Reverse polarity protection** | ✓ |
| **Short-circuit protection of the outputs** | ✓ [1] |

[1] Short-circuit opposite to another channel, US or GND permissable for maximum 30 s.

## Mechanical data

| | |
|---|---|
| **Measuring wheel circumference** | 200 mm |
| **Measuring wheel surface** | Cross knurled aluminium [1] |
| **Spring arm design** | 69.5 mm spring arm |
| **Mass** | 420 g |
| **Encoder material** | |
| Shaft | Stainless steel |
| Flange | Aluminum |
| Housing | Aluminum |
| Cable | PVC |
| **Spring arm mechanism material** | |
| Spring element | Spring steel, anti-corrosive |
| Measuring wheel, spring arm | Spring steel, anti-corrosive |
| **Start up torque** | 0.9 Ncm (at 20 °C) |
| **Operating torque** | 0.4 Ncm (at 20 °C) |
| **Operating speed** | ≤ 1,000 $min^{-1}$ |
| **Maximum operating speed** | 1,500 $min^{-1}$ |
| **Bearing lifetime** | 2 x 10^9 revolutions |
| **Maximum travel/deflection of spring arm** | 8 mm at 14 N spring travel |
| **Recommended pretension** | 8 N at 4 mm deflection [2] |
| **Max. permissible working area for the spring (continuous operation)** | ± 1.5 mm |
| **Recommended spring deflection** | 2 mm ... 8 mm |
| **Mounted encoder** | DBS50 Core, DBS50E-SKEPA0004 |

[1] The surface of a measuring wheel is subject to wear. This depends on contact pressure, acceleration behavior in the application, traversing speed, measurement surface, mechanical alignment of the measuring wheel, temperature, and ambient conditions. We recommend you regularly check the condition of the measuring wheel and replace as required.

[2] When measured from the top of the measuring surface.

## Ambient data

| | |
|---|---|
| **EMC** | According to EN 61000-6-2 and EN 61000-6-3 (class A) |
| **Enclosure rating** | IP65 |
| **Permissible relative humidity** | 90 % (Condensation not permitted) |
| **Operating temperature range** | –20 °C ... +60 °C<br>–35 °C ... +95 °C (on request) |
| **Storage temperature range** | –40 °C ... +100 °C, without package |

## Certificates

| | |
|---|---|
| **EU declaration of conformity** | ✓ |
| **UK declaration of conformity** | ✓ |
| **ACMA declaration of conformity** | ✓ |
| **China-RoHS** | ✓ |

## Classifications

| | |
|---|---|
| **ECLASS 5.0** | 27270501 |
| **ECLASS 5.1.4** | 27270501 |

| | |
|---|---|
| **ECLASS 6.0** | 27270590 |
| **ECLASS 6.2** | 27270590 |
| **ECLASS 7.0** | 27270501 |
| **ECLASS 8.0** | 27270501 |
| **ECLASS 8.1** | 27270501 |
| **ECLASS 9.0** | 27270501 |
| **ECLASS 10.0** | 27270790 |
| **ECLASS 11.0** | 27270707 |
| **ECLASS 12.0** | 27270504 |
| **ETIM 5.0** | EC001486 |
| **ETIM 6.0** | EC001486 |
| **ETIM 7.0** | EC001486 |
| **ETIM 8.0** | EC001486 |
| **UNSPSC 16.0901** | 41112113 |

## Dimensional drawing

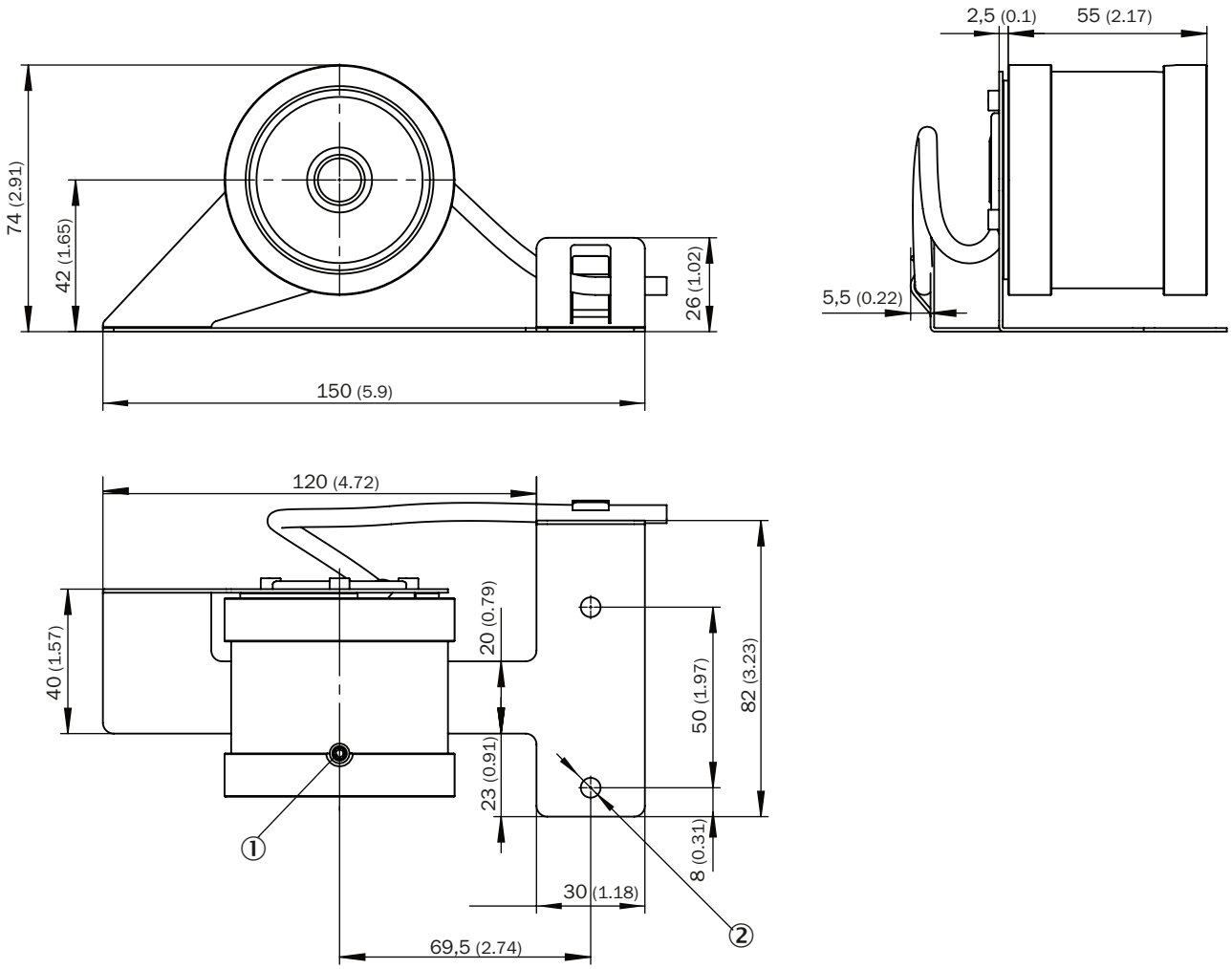

Dimensions in mm (inch)
① M4 x 20 set screw
② 2 x Ø 5.5

## PIN assignment

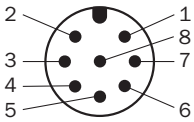


view of M12 male device connector on cable / housing

| Wire colors (cable connection) | Male connector M12, 8-pin | TTL/HTL 6-channel signal | Explanation |
|---|---|---|---|
| Brown | 1 | A- | Signal cable |
| White | 2 | A | Signal cable |
| Black | 3 | B- | Signal cable |
| Pink | 4 | B | Signal cable |
| Yellow | 5 | Z- | Signal cable |
| Purple | 6 | Z | Signal cable |
| Blue | 7 | GND | Ground connection |
| Red | 8 | $+U_s$ | Supply voltage |
| Screen | Screen | Screen | Screen connected to encoder housing |

## Diagrams

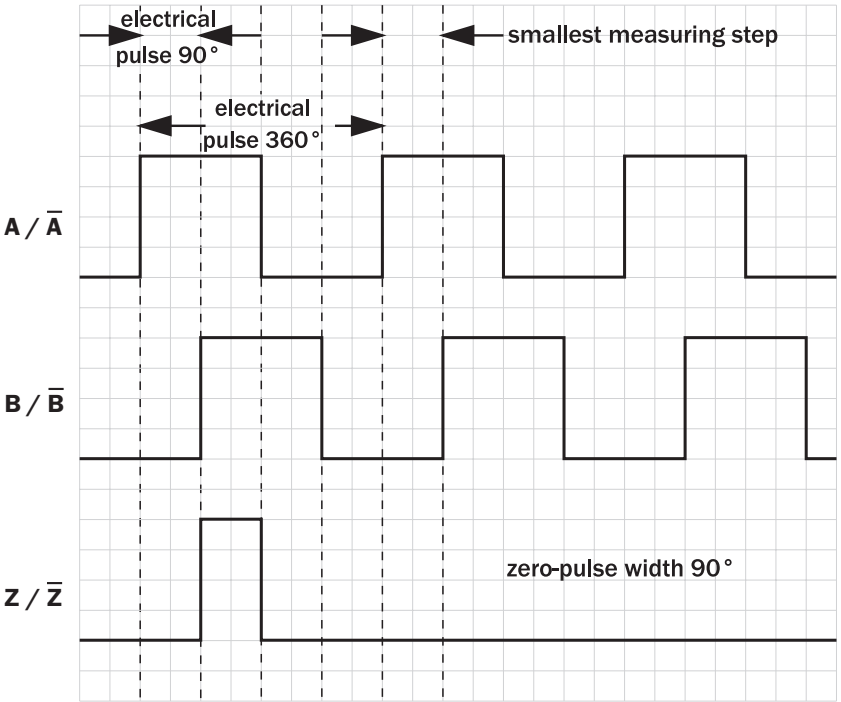

## Recommended accessories

Other models and accessories ➜ www.sick.com/DKV60

| | Brief description | Type | part no. |
|---|---|---|---|
| connectors and cables | | | |
|  | • **Connection type head A:** Female connector, M23, 12-pin, straight<br>• **Connection type head B:** Flying leads<br>• **Signal type:** Incremental<br>• **Cable:** 2 m, 11-wire, PUR<br>• **Description:** Incremental, shielded | DOL-2312-G02MLA3 | 2030682 |
|  | • **Connection type head A:** Female connector, M23, 12-pin, straight<br>• **Connection type head B:** Flying leads<br>• **Signal type:** Incremental<br>• **Cable:** 7 m, 11-wire, PUR<br>• **Description:** Incremental, shielded | DOL-2312-G07MLA3 | 2030685 |
|  | • **Connection type head A:** Female connector, M23, 12-pin, straight<br>• **Connection type head B:** Flying leads<br>• **Signal type:** Incremental<br>• **Cable:** 10 m, 11-wire, PUR<br>• **Description:** Incremental, shielded | DOL-2312-G10MLA3 | 2030688 |
|  | • **Connection type head A:** Female connector, M23, 12-pin, straight<br>• **Connection type head B:** Flying leads<br>• **Signal type:** Incremental<br>• **Cable:** 15 m, 11-wire, PUR<br>• **Description:** Incremental, shielded | DOL-2312-G15MLA3 | 2030692 |
|  | • **Connection type head A:** Female connector, M23, 12-pin, straight<br>• **Connection type head B:** Flying leads<br>• **Signal type:** Incremental<br>• **Cable:** 20 m, 11-wire, PUR<br>• **Description:** Incremental, shielded | DOL-2312-G20MLA3 | 2030695 |
|  | • **Connection type head A:** Female connector, M23, 12-pin, straight<br>• **Connection type head B:** Flying leads<br>• **Signal type:** Incremental<br>• **Cable:** 25 m, 11-wire, PUR<br>• **Description:** Incremental, shielded | DOL-2312-G25MLA3 | 2030699 |
|  | • **Connection type head A:** Female connector, M23, 12-pin, straight<br>• **Connection type head B:** Flying leads<br>• **Signal type:** Incremental<br>• **Cable:** 30 m, 11-wire, PUR<br>• **Description:** Incremental, shielded | DOL-2312-G30MLA3 | 2030702 |
|  | • **Connection type head A:** Female connector, M23, 12-pin, straight<br>• **Connection type head B:** Flying leads<br>• **Signal type:** Incremental<br>• **Cable:** 1.5 m, 12-wire, PUR, halogen-free<br>• **Description:** Incremental, shielded | DOL-2312-G1M5MA3 | 2029212 |
|  | • **Connection type head A:** Female connector, M23, 12-pin, straight<br>• **Connection type head B:** Flying leads<br>• **Signal type:** Incremental<br>• **Cable:** 3 m, 12-wire, PUR, halogen-free<br>• **Description:** Incremental, shielded | DOL-2312-G03MMA3 | 2029213 |
|  | • **Connection type head A:** Female connector, M23, 12-pin, straight<br>• **Connection type head B:** Flying leads<br>• **Signal type:** Incremental<br>• **Cable:** 5 m, 12-wire, PUR, halogen-free<br>• **Description:** Incremental, shielded | DOL-2312-G05MMA3 | 2029214 |
|  | • **Connection type head A:** Female connector, M23, 12-pin, straight<br>• **Connection type head B:** Flying leads<br>• **Signal type:** Incremental<br>• **Cable:** 10 m, 12-wire, PUR, halogen-free<br>• **Description:** Incremental, shielded | DOL-2312-G10MMA3 | 2029215 |
|  | • **Connection type head A:** Female connector, M23, 12-pin, straight<br>• **Connection type head B:** Flying leads<br>• **Signal type:** Incremental<br>• **Cable:** 20 m, 12-wire, PUR, halogen-free<br>• **Description:** Incremental, shielded | DOL-2312-G20MMA3 | 2029216 |
|  | • **Connection type head A:** Female connector, M23, 12-pin, straight<br>• **Connection type head B:** Flying leads<br>• **Signal type:** Incremental | DOL-2312-G30MMA3 | 2029217 |

| | Brief description | Type | part no. |
|---|---|---|---|
| | • **Cable:** 30 m, 12-wire, PUR, halogen-free<br>• **Description:** Incremental, shielded | | |
|  | • **Connection type head A:** Female connector, M12, 8-pin, straight<br>• **Connection type head B:** Flying leads<br>• **Signal type:** Incremental, SSI<br>• **Cable:** 2 m, 8-wire, PUR, halogen-free<br>• **Description:** Incremental, shieldedSSI<br>• **Connection systems:** Flying leads | DOL-1208-G02MAC1 | 6032866 |
|  | • **Connection type head A:** Female connector, M12, 8-pin, straight<br>• **Connection type head B:** Flying leads<br>• **Signal type:** Incremental, SSI<br>• **Cable:** 5 m, 8-wire, PUR, halogen-free<br>• **Description:** Incremental, shieldedSSI<br>• **Connection systems:** Flying leads | DOL-1208-G05MAC1 | 6032867 |
|  | • **Connection type head A:** Female connector, M12, 8-pin, straight<br>• **Connection type head B:** Flying leads<br>• **Signal type:** Incremental, SSI<br>• **Cable:** 10 m, 8-wire, PUR, halogen-free<br>• **Description:** Incremental, shieldedSSI<br>• **Connection systems:** Flying leads | DOL-1208-G10MAC1 | 6032868 |
|  | • **Connection type head A:** Female connector, M12, 8-pin, straight<br>• **Connection type head B:** Flying leads<br>• **Signal type:** Incremental, SSI<br>• **Cable:** 20 m, 8-wire, PUR, halogen-free<br>• **Description:** Incremental, shieldedSSI<br>• **Connection systems:** Flying leads | DOL-1208-G20MAC1 | 6032869 |
|  | • **Connection type head A:** Female connector, M12, 8-pin, straight<br>• **Connection type head B:** Flying leads<br>• **Signal type:** Incremental, SSI<br>• **Cable:** 25 m, 8-wire, PUR, halogen-free<br>• **Description:** Incremental, shieldedSSI<br>• **Connection systems:** Flying leads | DOL-1208-G25MAC1 | 6067859 |

# SICK AT A GLANCE

SICK is one of the leading manufacturers of intelligent sensors and sensor solutions for industrial applications. A unique range of products and services creates the perfect basis for controlling processes securely and efficiently, protecting individuals from accidents and preventing damage to the environment.

We have extensive experience in a wide range of industries and understand their processes and requirements. With intelligent sensors, we can deliver exactly what our customers need. In application centers in Europe, Asia and North America, system solutions are tested and optimized in accordance with customer specifications. All this makes us a reliable supplier and development partner.

Comprehensive services complete our offering: SICK LifeTime Services provide support throughout the machine life cycle and ensure safety and productivity.

**For us, that is “Sensor Intelligence.”**

# WORLDWIDE PRESENCE:

Contacts and other locations –www.sick.com