# NBC- 2,0-93E/P12FSD - Network cable

1476018

https://www.phoenixcontact.com/us/products/1476018

Please be informed that the data shown in this PDF document is generated from our online catalog. Please find the complete data in the user documentation. Our general terms of use for downloads are valid.



Network cable, Ethernet CAT5 (100 Mbps), 4-position, PUR halogen-free, water blue RAL 5021, shielded (Aluminum-coated foil, tinned copper braided shield), Advanced Shielding Technology, Socket straight M12 Push Pull, coding: D / IP67, on free cable end, cable length: 2 m

## Commercial data

| | |
|---|---|
| Item number | 1476018 |
| Packing unit | 1 pc |
| Minimum order quantity | 1 pc |
| Sales key | BF04 |
| Product key | BF1CJJ |
| GTIN | 4063151889074 |
| Weight per piece (including packing) | 105.9 g |
| Weight per piece (excluding packing) | 22.22 g |
| Customs tariff number | 85444290 |
| Country of origin | PL |

## Technical data

### Product properties

| | |
|---|---|
| Product type | Data cable preassembled |
| Application | Standard |
| Sensor type | Ethernet |
| Number of positions | 4 |
| Shielded | yes |

### Interfaces

| | |
|---|---|
| Bus system | Ethernet |
| Signal type/category | Ethernet CAT5 (IEC 11801), 100 Mbps |

### Signaling

| | |
|---|---|
| Status display | No |
| Status display present | No |

### Electrical properties

| | |
|---|---|
| Nominal voltage $U_N$ | 48 V AC |
| | 60 V DC |
| Nominal current $I_N$ | 1.5 A |
| Transmission medium | Copper |
| Transmission characteristics (category) | CAT5 (IEC 11801:2002) |

### Connector

Connection 1

| | |
|---|---|
| Type | free cable end |
| Locking type | Push Pull |
| Flammability rating according to UL 94 | V0 |
| Overvoltage category | II |
| Degree of pollution | 3 |
| Ambient temperature (operation) | -25 °C ... 85 °C |

Connection 2

| | |
|---|---|
| Type | free cable end |

### Cable/line

| | |
|---|---|
| Cable length | 2 m |

Ethernet flexible CAT5, 2-pair [93E]

| | |
|---|---|
| Dimensional drawing | 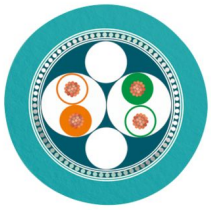 |
| Cable weight | 42 kg/km |
| UL AWM Style | 20963 (80°C/30 V) |
| Wiring standards/regulations | Electrical requirements EN 50288-2-2 |
| Number of positions | 4 |
| Shielded | yes |
| Cable type | Ethernet flexible CAT5, 2-pair [93E] |
| Conductor structure | 2x2xAWG26/7, SF/UTP |
| Signal runtime | 5.3 ns/m |
| Conductor structure signal line | 7x 0.16 mm |
| AWG signal line | 26 |
| Conductor cross section | 2x 2x 0.14 mm² |
| Wire diameter incl. insulation | 0.98 mm |
| External cable diameter | 6.40 mm ±0.2 mm |
| Outer sheath, material | PUR |
| External sheath, color | water blue RAL 5021 |
| Conductor material | Bare Cu litz wires |
| Material wire insulation | Foamed PE |
| Single wire, color | white/orange-orange, white/green-green |
| Thickness, outer sheath | 1.20 mm |
| Twisted pairs | 2 cores to the pair |
| Overall twist | Two pairs with two fillers to the core |
| Optical shield covering | 70 % |
| Insulation resistance | ≥ 500 MΩ*km |
| Coupling resistance | ≤ 100.00 mΩ/m (at 10 MHz) |
| Loop resistance | ≤ 290.00 Ω/km |
| Wave impedance | 100 Ω ±5 Ω (at 100 MHz) |
| Cable capacity | approx. 45 nF/km (at 1 kHz) |
| Nominal voltage, cable | ≤ 100 V (Peak value, not for high-power applications) |
| Test voltage Core/Core | 700 V (50 Hz, 1 min.) |
| Test voltage Core/Shield | 700.00 V (50 Hz, 1 min.) |
| Current carrying capacity of cable | 2.00 A (according to DIN VDE 0891-1) |
| Minimum bending radius, fixed installation | 4 x D |
| Minimum bending radius, flexible installation | 8 x D |
| Smallest bending radius, fixed installation | 26 mm |
| Smallest bending radius, movable installation | 52 mm |
| Tensile strength | ≤ 80 N |

| | |
|---|---|
| Near end crosstalk attenuation (NEXT) | 65.3 dB (with 1 MHz) |
| | 56.3 dB (at 4 MHz) |
| | 50.3 dB (at 10 MHz) |
| | 47.2 dB (at 16 MHz) |
| | 45.8 dB (at 20 MHz) |
| | 42.9 dB (at 31.25 MHz) |
| | 38.4 dB (at 62.5 MHz) |
| | 35.3 dB (at 100 MHz) |
| Power-summated near end crosstalk attenuation (PSNEXT) | 62.3 dB (with 1 MHz) |
| | 53.3 dB (at 4 MHz) |
| | 47.3 dB (at 10 MHz) |
| | 44.2 dB (at 16 MHz) |
| | 42.8 dB (at 20 MHz) |
| | 39.9 dB (at 31.25 MHz) |
| | 35.4 dB (at 62.5 MHz) |
| | 32.3 dB (at 100 MHz) |
| Return attenuation (RL) | 23 dB (at 4 MHz) |
| | 24.1 dB (at 8 MHz) |
| | 25 dB (at 10 MHz) |
| | 25 dB (at 16 MHz) |
| | 25 dB (at 20 MHz) |
| | 23.6 dB (at 31.25 MHz) |
| | 21.5 dB (at 62.5 MHz) |
| | 20.1 dB (at 100 MHz) |
| Shield attenuation | 3.2 dB (with 1 MHz) |
| | 6 dB (at 4 MHz) |
| | 9.5 dB (at 10 MHz) |
| | 12.1 dB (at 16 MHz) |
| | 13.6 dB (at 20 MHz) |
| | 17.1 dB (at 31.25 MHz) |
| | 24.8 dB (at 62.5 MHz) |
| | 32 dB (at 100 MHz) |
| Halogen-free | according to IEC 60754-1 |
| Flame resistance | according to IEC 60332-1-2 |
| | in acc. to UL VW1 |
| | in accordance with UN ECE-R 118.03 |
| Resistance to oil | in accordance with EN 60811-2-1 |
| Ambient temperature (operation) | -40 °C ... 80 °C (cable, fixed installation) |
| | -20 °C ... 80 °C (Cable, flexible installation) |
| Ambient temperature (installation) | -20 °C ... 80 °C |

## Drawings

Dimensional drawing

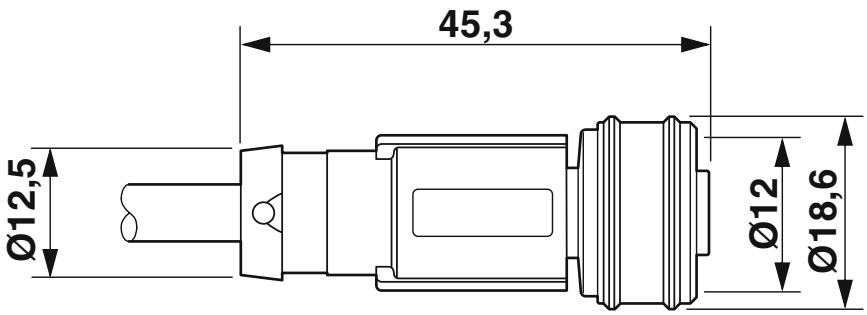


M12 push-pull female connector, straight

Circuit diagram

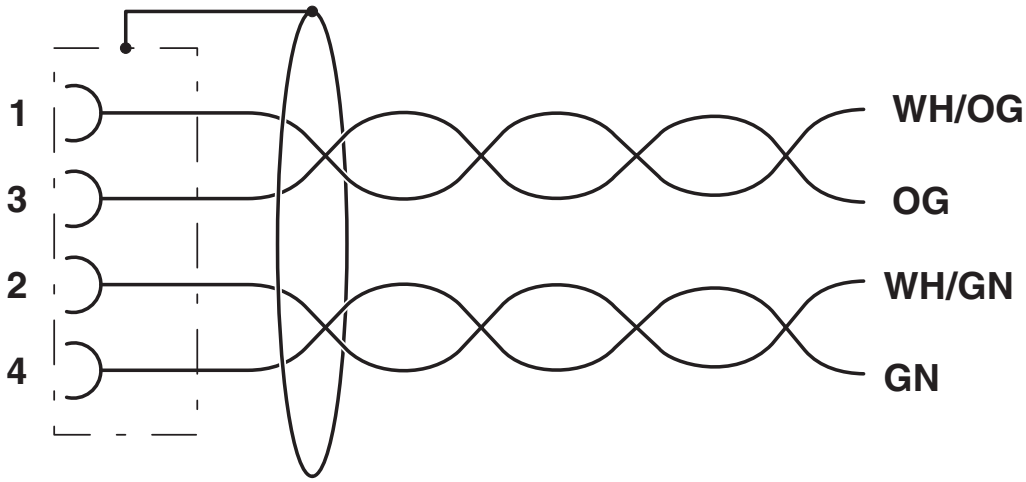

Schematic diagram

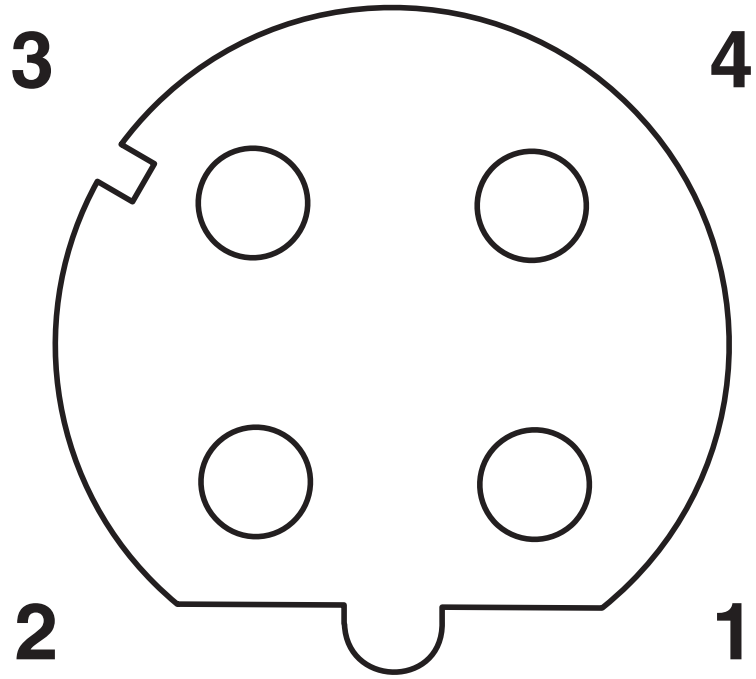


Pin assignment M12 socket, 4-pos., D-coded, female side

## Classifications

### ECLASS

| | |
|---|---|
| ECLASS-11.0 | 27060307 |
| ECLASS-12.0 | 27060307 |
| ECLASS-13.0 | 27060307 |

### ETIM

| | |
|---|---|
| ETIM 9.0 | EC001855 |

## Environmental product compliance

EU RoHS

| | |
|---|---|
| Fulfills EU RoHS substance requirements | Yes, No exemptions |

China RoHS

| | |
|---|---|
| Environment friendly use period (EFUP) | EFUP-E |
| | No hazardous substances above the limits |

EU REACH SVHC

| | |
|---|---|
| REACH candidate substance (CAS No.) | No substance above 0.1 wt% |

## Accessories

### PROT-M12 FS-PA-CHAIN - Sealing cap

1430873

https://www.phoenixcontact.com/us/products/1430873

M12 sealing cap made of plastic with fixing band, for sensor cables, for free M12 plugs



### SAC-M12-EXCLIP-M - Locking clip

1558988

https://www.phoenixcontact.com/us/products/1558988

Locking clip for the pin side of sensor/actuator cables with M12 connector and M12 connectors for assembly, for knurl diameter: 15 mm or for Allen key with a wrench size of 14 mm, prevents the disconnection of plug-in connections without tools




Phoenix Contact 2024 © - all rights reserved
https://www.phoenixcontact.com



Phoenix Contact USA
586 Fulling Mill Road
Middletown, PA 17057, United States
(+717) 944-1300
info@phoenixcon.com