Ratings
Voltage: 150 V
Temperature: -40~70 °C

Conductor
Conductor count: 8
Gauge: 28 AWG 0.08 mm²
Material: Tinned copper strands
Strand size: ∅0.05x40
Resistance at 20 °C: 240 Ω /km Max

Insulator
Material: HDPE
Color: red, black, white, yellow, blue, green, orange, purple
Diameter: ∅0.7 ±0.10 mm
Nominal thickness: 0.16 mm
Resistance at 20 °C: 100 MΩ /km Min

Wrap
Material: cotton paper

Filler
Material: aramid fiber

Outer jacket
Material: TPU
Color: white
Diameter: ∅3.5 ±0.20 mm
Nominal thickness: 0.5 mm

Tests
Tensile strength: 26 kgf min
Dielectric test: 1500 V dc for 1 minute without breakdown
Bend test at 200 g, ±60 °, 30 cycles /min: 15,000 cycle minimum

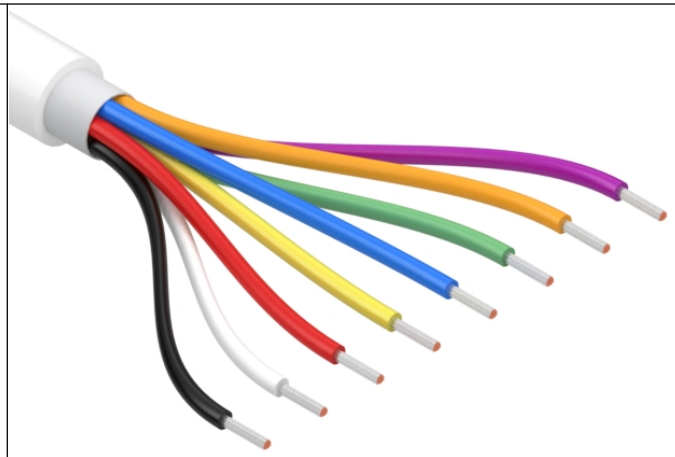

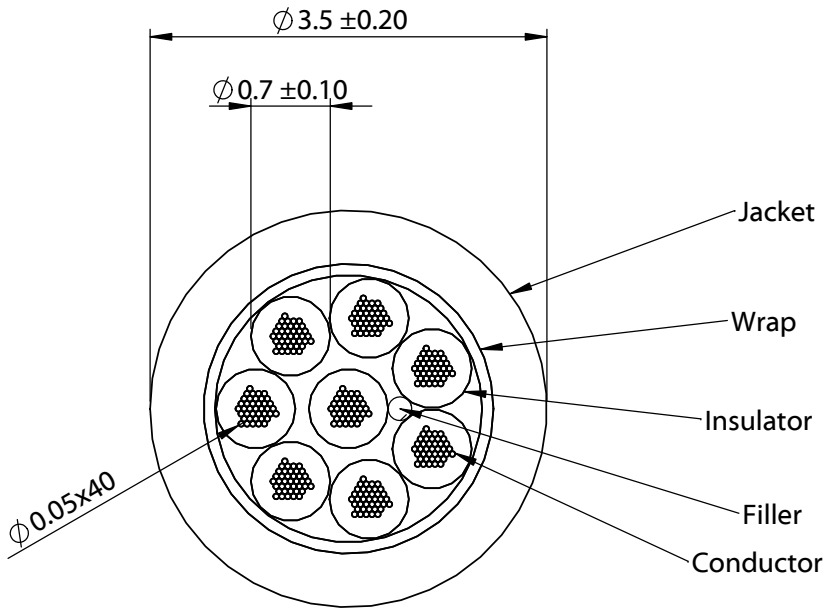

Revision:	Date:	Description:
A	9/12/2022	Initial release

Prepared: MP Digitally signed by MP Date: 2022.09.23 13:32:33 -07'00'

Verified: PB Digitally signed by PB Date: 2022.09.23 14:20:43 -07'00'

Dimensions are in millimeters.
Tolerances:
X: ± 0.5 mm
X.X: ± 0.3 mm
X.XX: ± 0.05 mm

Notes:

RoHS compliant
Jacket meets ISO 10993 Biological Compatibility
Phthalate and halogen free
Function test: no open, no short, no intermittent

Description:

Wire, 8C TS, 28 AWG, 150V, 70C, 3.5 mm, TPU, 75A, white, WBL

TENSILITY
tel 1.541.323.3228 800 877.670.7118
fax 1.541.323.4202 web tensility.com

Size: A
Part number: 30-02827
Scale: 15:1
Sheet 1 of 1

5 4 3 2 1

To see a custom version of this cable assembly, call Tensility at 541-323-3228 or email engineering@tensility.com