Data sheet

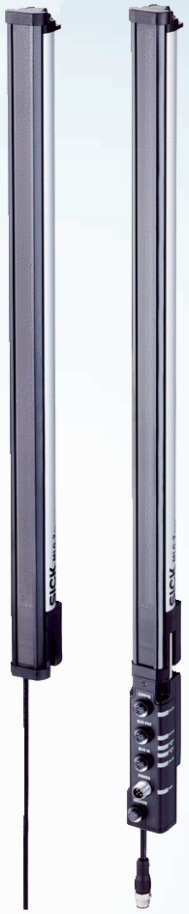

MLG30N-2520N10501

MLG-2

AUTOMATION LIGHT GRIDS

SICK
Sensor Intelligence.



Illustration may differ

Ordering information

Type	part no.
MLG30N-2520N10501	1218853

Other models and accessories ➜ www.sick.com/MLG-2

Detailed technical data

Features

Device version	ProNet – extended functionality including fieldbus
Sensor principle	Sender/receiver
Minimum detectable object (MDO)	30 mm [1] 34 mm [2] [3]
Beam separation	30 mm
Type of synchronization	Cable
Number of beams	85
Detection height	2,520 mm
Software features (default)	
Q_1	Presence detection
Operating mode	
Standard	✓
Transparent	✓
Dust- and sunlight-resistant	✓
Function	
Cross beam	✓
Beam blanking	✓
High-speed scan	✓
High measurement accuracy	✓
Applications	

[1] MDO min. detectable object at high measurement accuracy.
[2] MDO min. detectable object for standard measurement accuracy.
[3] Depending on beam separation without cross beam setting.

Switching output	Object detection/object widthObject recognitionHeight classificationHole detection/hole size-Outside/inside dimensionObject positionHole positionZone definition
Data interface	Object detectionHole detectionObject height measurementMeasurement of the outside dimensionMeasurement of the inside dimensionMeasurement of the object positionMeasurement of the hole position
Included with delivery	1 × sender 1 × receiver 1 x Fieldbus module 4/6 x QuickFix brackets (6 x QuickFix brackets for monitoring heights above 2 m) 1 × Quick Start Guide

[1] MDO min. detectable object at high measurement accuracy.
[2] MDO min. detectable object for standard measurement accuracy.
[3] Depending on beam separation without cross beam setting.

Mechanics/electronics

Light source	LED, Infrared light
Wave length	850 nm
Supply voltage V_s	DC 19.2 V ... 28.8 V [1]
Power consumption sender	59.25 mA [2]
Power consumption receiver	137 mA [2]
Fieldbus module current consumption	115 mA
Ripple	< 5 V_{pp}
Output current $I_{max.}$	100 mA
Output load, capacitive	100 nF
Output load, Inductive	1 H
Initialization time	< 1 s
Switching output	Push-pull: PNP/NPN
Connection type	Plug, M12, 5-pin, 0.22 m Connector M12, 12-pin, 0.21 m
Housing material	Aluminum
Display	LED
Enclosure rating	IP65, IP67 [3]
Circuit protection	U_V connections, reverse polarity protected Output Q short-circuit protected Interference pulse suppression
Protection class	III
Weight	5.349 kg
Front screen	PMMA
Option	None
UL File No.	NRKH.E181493 (Sensor)

[1] Without load.
[2] Without load with 24 V.
[3] Operating in outdoor condition only with a external protection housing.

Performance

Maximum range	7 m [1]
Minimum range	≥ 0 m
Operating range	5 m
Response time	7.9 ms [2]

[1] No reserve for environmental issue and deterioration of the diode.
[2] Without high speed.

Interfaces

PROFINET	✓
Digital output	Q_1
Number	1

Ambient data

Shock resistance	Continuous shocks 10 g, 16 ms, 1000 shocks Single shocks 15 g, 11 ms 3 per axle
Vibration resistance	Sinusoidal oscillation 10-150 Hz 5 g
EMC	EN 60947-5-2
Ambient light immunity	Direct: 150,000 lx [1] Indirect: 200,000 lx [2]
Ambient operating temperature	–30 °C ... +55 °C
Ambient temperature, storage	–40 °C ... +70 °C

[1] Outdoor mode.
[2] Light resistance indirect.

Certificates

EU declaration of conformity	✓
UK declaration of conformity	✓
ACMA declaration of conformity	✓
Moroccan declaration of conformity	✓
China-RoHS	✓
cULus certificate	✓
Photobiological safety (IEC EN 62471)	✓

Classifications

ECLASS 5.0	27270910
ECLASS 5.1.4	27270910
ECLASS 6.0	27270910
ECLASS 6.2	27270910
ECLASS 7.0	27270910
ECLASS 8.0	27270910
ECLASS 8.1	27270910
ECLASS 9.0	27270910
ECLASS 10.0	27270910
ECLASS 11.0	27270910

ECLASS 12.0	27270910
ETIM 5.0	EC002549
ETIM 6.0	EC002549
ETIM 7.0	EC002549
ETIM 8.0	EC002549
UNSPSC 16.0901	39121528

Dimensional drawing

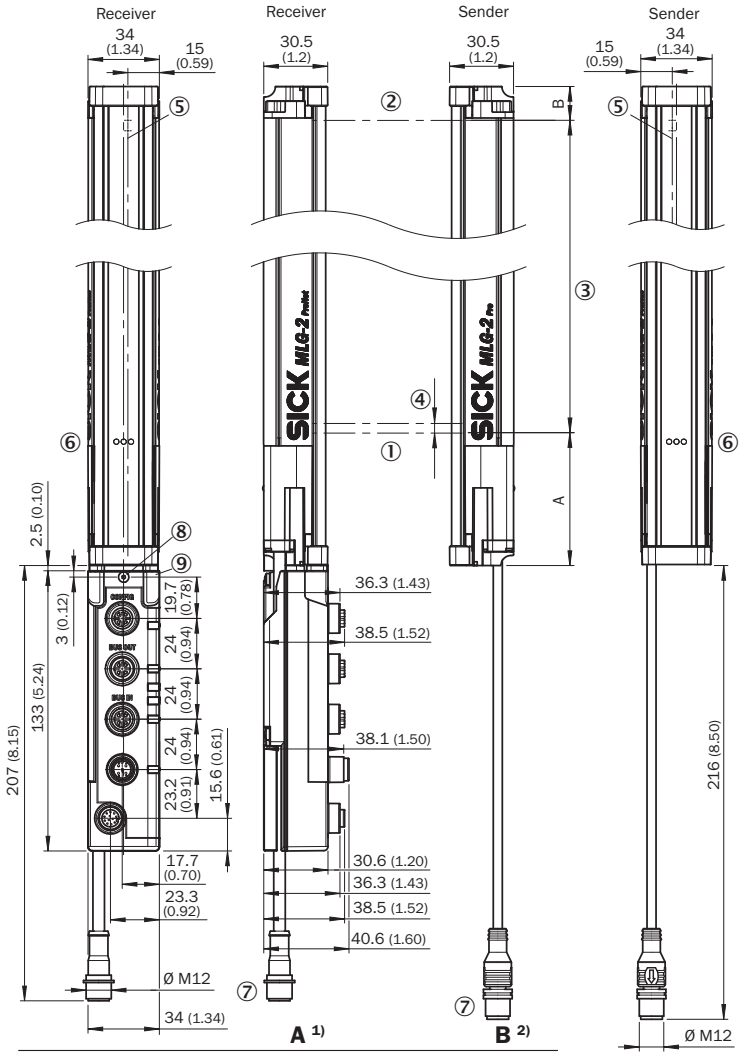

Beam separation 2.5 mm	62.25 (2.45)	17.15 (0.68)
Beam separation 5 mm	63.3 (2.49)	16.1 (0.63)
Beam separation 10 mm	68.3 (2.69)	16.1 (0.63)
Beam separation 20 mm	68.3 (2.69)/78.3 (3.08) [3]	16.1 (0.63)
Beam separation 25 mm	83.3 (3.28)	16.1 (0.63)
Beam separation 30 mm	88.3 (2.69)	16.1 (0.63)
Beam separation 50 mm	108.3 (4.26)	16.1 (0.63)

[1] Distance: MLG-2 edge - first beam
[2] Distance: MLG-2 edge - last beam
[3] MLG20x-xx**40**: 68.3 mm
MLG20x-xx**80**: 78.3 mm

Dimensions in mm (inch)

① First beam
② last beam
③ detection height (see technical data)
④ Beam separation
⑤ Optical axis
⑥ status indicator: green, yellow, red LEDs
⑦ Connection
⑧ safty screw M4; turning moment 0,5 Nm
⑨ for thread bold M4; turning moment 0,5 Nm

Connection type and diagram PROFINET, EtherCAT®, EtherNet/IP

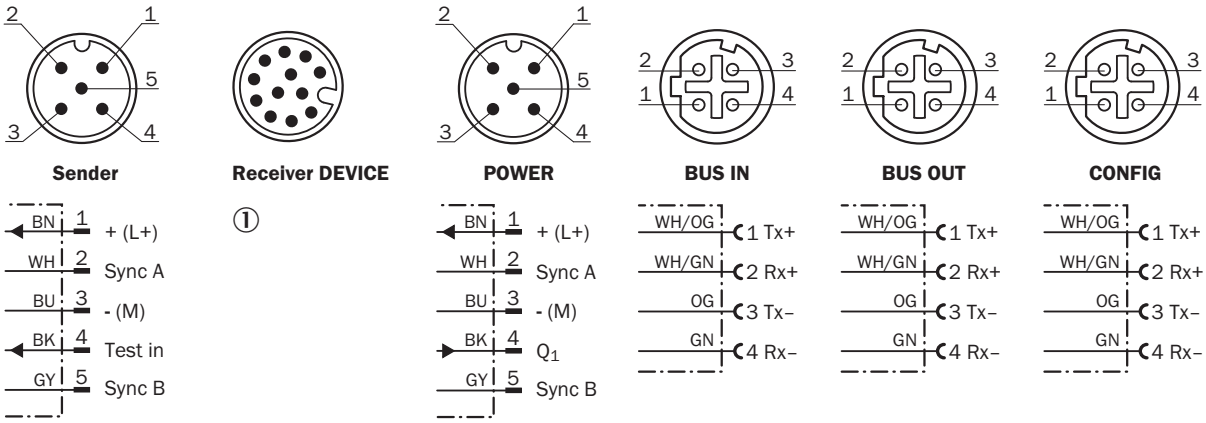

① *Connection to fieldbus module*

Pinouts Ethernet

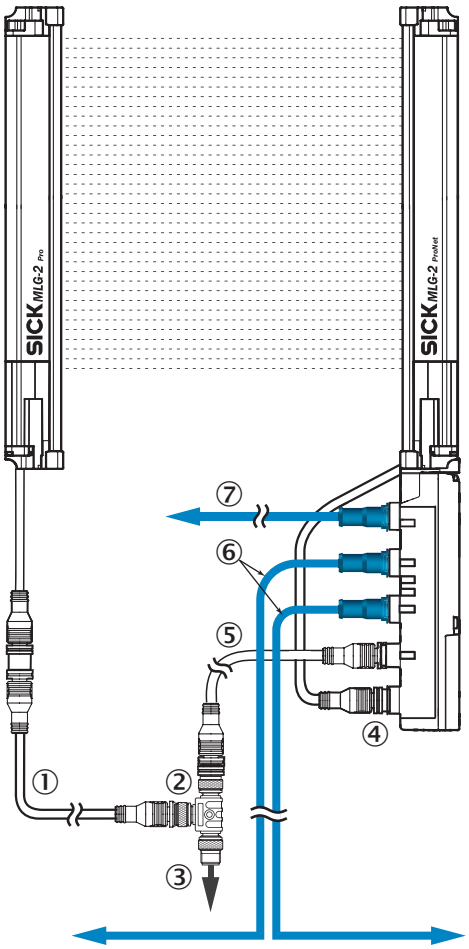

① Connection cable receiver (2096010)
② T-piece
③ Connection cable (2096240)
④ connection receiver “DEVICE”
⑤ Connection cable “POWER” (2096010)
⑥ Ethernet Connection cable “BUS IN, BUS OUT”
⑦ Ethernet connection cable “CONFIG”

Adjustments

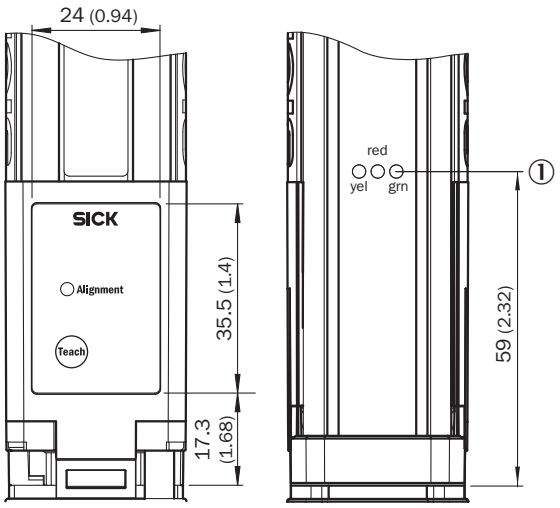

① status indicator: green, yellow, red LEDs

Connection diagram T-piece

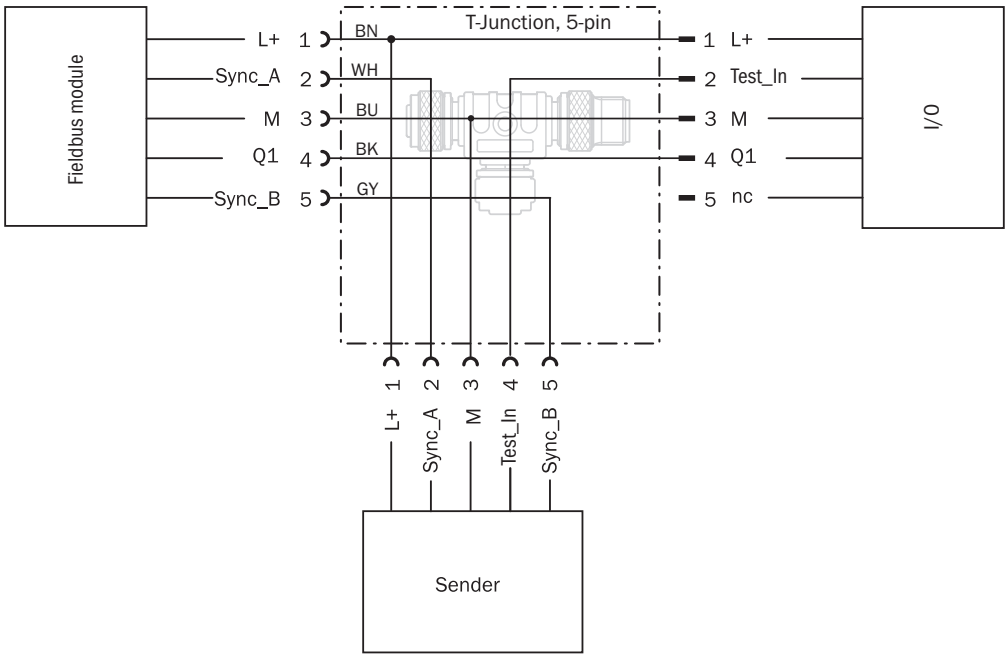

Recommended accessories

Other models and accessories ➜ www.sick.com/MLG-2

	Brief description	Type	part no.
connectors and cables			
	• **Connection type head A:** Female connector, M12, 5-pin, A-coded • **Connection type head B:** Female connector, M12, 5-pin, A-coded • **Connection type head C:** Male connector, M12, 4-pin, A-coded • **Description:** Unshielded • **Note:** Master Interface - Type	SBO-02G12-SM	6029305
	• **Connection type head A:** Male connector, M12, 4-pin, D-coded • **Connection type head B:** Male connector, M12, 4-pin, D-coded • **Signal type:** Ethernet • **Cable:** 5 m, 4-wire, PUR, halogen-free • **Description:** Ethernet, twisted pair, shielded • **Permitted cross-section:** ≥ 0.25 mm² • **Application:** Zones with oils and lubricants	YM2D24-050EA2M2D24	6034422
	• **Connection type head A:** Female connector, M12, 5-pin, straight, A-coded • **Connection type head B:** Flying leads • **Signal type:** Sensor/actuator cable • **Cable:** 5 m, 5-wire, PVC • **Description:** Sensor/actuator cable, unshielded • **Application:** Zones with chemicals, Uncontaminated zones	YF2A15-050VB5XLEAX	2096240
	• **Connection type head A:** Female connector, M12, 5-pin, straight, A-coded • **Connection type head B:** Male connector, M12, 5-pin, straight, A-coded • **Signal type:** Sensor/actuator cable • **Cable:** 5 m, 5-wire, PUR, halogen-free • **Description:** Sensor/actuator cable, unshielded • **Application:** Uncontaminated zones, Zones with oils and lubricants, Robot, Drag chain operation	YF2A15-050UB5M2A15	2096010
	• **Connection type head A:** Male connector, M12, 4-pin, straight, D-coded • **Connection type head B:** Male connector, RJ45, 4-pin, straight • **Signal type:** Ethernet, PROFINET • **Cable:** 5 m, 4-wire, PUR, halogen-free • **Description:** Ethernet, shieldedPROFINET • **Application:** Drag chain operation, Zones with oils and lubricants	YM2D24-050P-N1MRJA4	2106184
Mounting systems			
	• **Description:** Mounting bracket for external mounting of the fieldbus module, 1 × mounting bracket and 1 × M5 × 6 screw • **Material:** Stainless steel • **Details:** Stainless steel V2A (1.4301)	BEF-WN-FBM-SET1	2082322

SICK AT A GLANCE

SICK is one of the leading manufacturers of intelligent sensors and sensor solutions for industrial applications. A unique range of products and services creates the perfect basis for controlling processes securely and efficiently, protecting individuals from accidents and preventing damage to the environment.

We have extensive experience in a wide range of industries and understand their processes and requirements. With intelligent sensors, we can deliver exactly what our customers need. In application centers in Europe, Asia and North America, system solutions are tested and optimized in accordance with customer specifications. All this makes us a reliable supplier and development partner.

Comprehensive services complete our offering: SICK LifeTime Services provide support throughout the machine life cycle and ensure safety and productivity.

For us, that is “Sensor Intelligence.”

WORLDWIDE PRESENCE:

Contacts and other locations –www.sick.com