Data sheet



AFM60S-TEKC262144

AFS/AFM60S Pro

SAFETY ENCODERS

SICK
Sensor Intelligence.



Illustration may differ

Ordering information

Type	part no.
AFM60S-TEKC262144	1126837

Other models and accessories ➜ www.sick.com/AFS_AFM60S_Pro

Detailed technical data

Safety-related parameters

Safety integrity level	SIL 3 (IEC 61508, IEC 61800-5-3) [1]
Performance level	PL e (EN ISO 13849-1) [1]
Category	3 (EN ISO 13849-1) 4 (EN ISO 13849-1)
PFH (mean probability of a dangerous failure per hour)	5.5×10^{-9} at 40 °C [2] 1.8×10^{-8} at 80 °C [2]
T_M (mission time)	20 years (EN ISO 13849-1) [3]
Safety-related accuracy	0.09° category 3 [4] 0.35° category 4 [4]

[1] For more detailed information on the exact configuration of your machine/unit, please consult your relevant SICK branch office.

[2] The values displayed apply to a the temperature at the operating temperature measuring point and diagnostic degree of coverage of 99%, which must be achieved by the external evaluation unit.

[3] Depending on the application, the operating life may also be limited by the bearing lifetime.

[4] The safety-related accuracy indicates the maximum positioning error limit with which the safety functions can be supported.

Performance

Number of steps per revolution (max. resolution)	262,144 (18 bit)
Number of revolutions	4,096 (12 bit)
Max. resolution (number of steps per revolution x number of revolutions)	18 bit x 12 bit (262,144 x 4,096)
Error limits G	0.05° [1]
Repeatability standard deviation σ_r	0.002° [2]

[1] In accordance with DIN ISO 1319-1, position of the upper and lower error limit depends on the installation situation, specified value refers to a symmetrical position, i.e. deviation in upper and lower direction is the same.

[2] In accordance with DIN ISO 55350-13; 68.3% of the measured values are inside the specified area.

Interfaces

Communication interface	SSI
Communication Interface detail	SSI + Sin/Cos
Initialization time	2 s [1]
Position forming time	< 1 µs
Parameterising data	Number of steps per revolution Preset position, preset position via hardware pin, counting direction, counting direction via hardware pin, reset factory setting, read out error memory, generate report
Code type	Gray
Code sequence parameter adjustable	CW/CCW configurable [2]
Clock frequency	100 kHz, ≤ 1 MHz
Set (electronic adjustment)	H-active (L = 0 - 1,5 V, H = 2,0 - Us V)
CW/CCW (counting sequence when turning)	L-active (L = 0 - 1,5 V, H = 2,0 - Us V)
Sine/cosine periods per revolution	1,024
Output frequency	≤ 153.6 kHz
Load resistance	≥ 120 Ω
Signal before differential generation	0.5 V_{pp}, ± 20 %
Signal offset before differential generation	2.5 V ± 10 %
Signal after differential generation	1 V_{pp}, ± 20 %

[1] Valid signals can be read once this time has elapsed.
[2] Set on tool side: CW with view to the shaft.

Electronics

Connection type	Male connector, M12, 12-pin, radial
Supply voltage	4.5 ... 30 V
Power consumption	0.7 W (without load)
Reverse polarity protection	✓
Short-circuit protection	✓ [1]

[1] SinCos interface: Short-circuit to another channel or GND permitted for max. 30 sec. In the case of U_S ≤ 12 V additional short-circuit to U_S permitted for max. 30 sec.
SSI interface: Short-circuit to another channel or GND permitted for max. 30 s. In the case of U_S ≤ 5 V, additional short-circuit to U_S permitted for max. 30 s.

Mechanics

Mechanical design	Through hollow shaft
Shaft diameter	12 mm [1]
Characteristics of the shaft	With feather key groove
Weight	0.25 kg [2]
Shaft material	Stainless steel
Flange material	Aluminum
Material, stator coupling	Stainless steel

[1] With feather key groove.
[2] Based on devices with male connector.
[3] Depending on the application, the operating life may also be limited by the bearing lifetime.
[4] The value corresponds to L_{10mr} (ISO/TS 16281) at 10 °C up to 60 °C operating temperature, speed > 10 U/min, at max. permitted shaft load / shaft movement.

Housing material	Aluminum die cast
Start up torque	≤ 0.8 Ncm (+20 °C)
Operating torque	≤ 0.6 Ncm (+20 °C)
Permissible movement static	± 0.3 mm (radial) ± 0.5 mm (axial)
Permissible movement dynamic	± 0.05 mm (radial) ± 0.1 mm (axial)
Operating speed	≤ 6,000 min^{-1}
Moment of inertia of the rotor	56 gcm^2
Bearing lifetime	3.6 x 10^9 revolutions [3) 4)]

[1)] With feather key groove.
[2)] Based on devices with male connector.
[3)] Depending on the application, the operating life may also be limited by the bearing lifetime.
[4)] The value corresponds to L_{10mr} (ISO/TS 16281) at 10 °C up to 60 °C operating temperature, speed > 10 U/min, at max. permitted shaft load / shaft movement.

Ambient data

EMC	EN 61000-6-2 EN 61000-6-3 EN 61000-6-7
Enclosure rating	IP65 (IEC 60529)
Permissible relative humidity	90 % (Condensation not permitted)
Operating temperature range	–30 °C ... +85 °C [1)]
Storage temperature range	–30 °C ... +85 °C, without package
Resistance to shocks	100 g, 6 ms (according to EN 60068-2-27) [2)]
Resistance to vibration	18 g, 10 Hz ... 1,000 Hz (EN 60068-2-6) [2)]
Operating height (above sea level)	≤ 2,000 m (80 kPa)
Protection class	III (according to DIN EN 61140)
Contamination rating	2 (IEC 60664-1)

[1)] At operating temperature measuring point.
[2)] Tested during operation within the safety-related accuracy.

Classifications

ECLASS 5.0	27270502
ECLASS 5.1.4	27270502
ECLASS 6.0	27270590
ECLASS 6.2	27270590
ECLASS 7.0	27270502
ECLASS 8.0	27270502
ECLASS 8.1	27270502
ECLASS 9.0	27270502
ECLASS 10.0	27270502
ECLASS 11.0	27270502
ECLASS 12.0	27270502
ETIM 5.0	EC001486
ETIM 6.0	EC001486

ETIM 7.0	EC001486
ETIM 8.0	EC001486
UNSPSC 16.0901	41112113

Certificates

EU declaration of conformity	✓
UK declaration of conformity	✓
ACMA declaration of conformity	✓
Moroccan declaration of conformity	✓
China-RoHS	✓
cULus certificate	✓
EC-Type-Examination approval	✓
Information according to Art. 3 of Data Act (Regulation EU 2023/2854)	✓

Dimensional drawing Through hollow shaft, M12 and M23 radial male connector

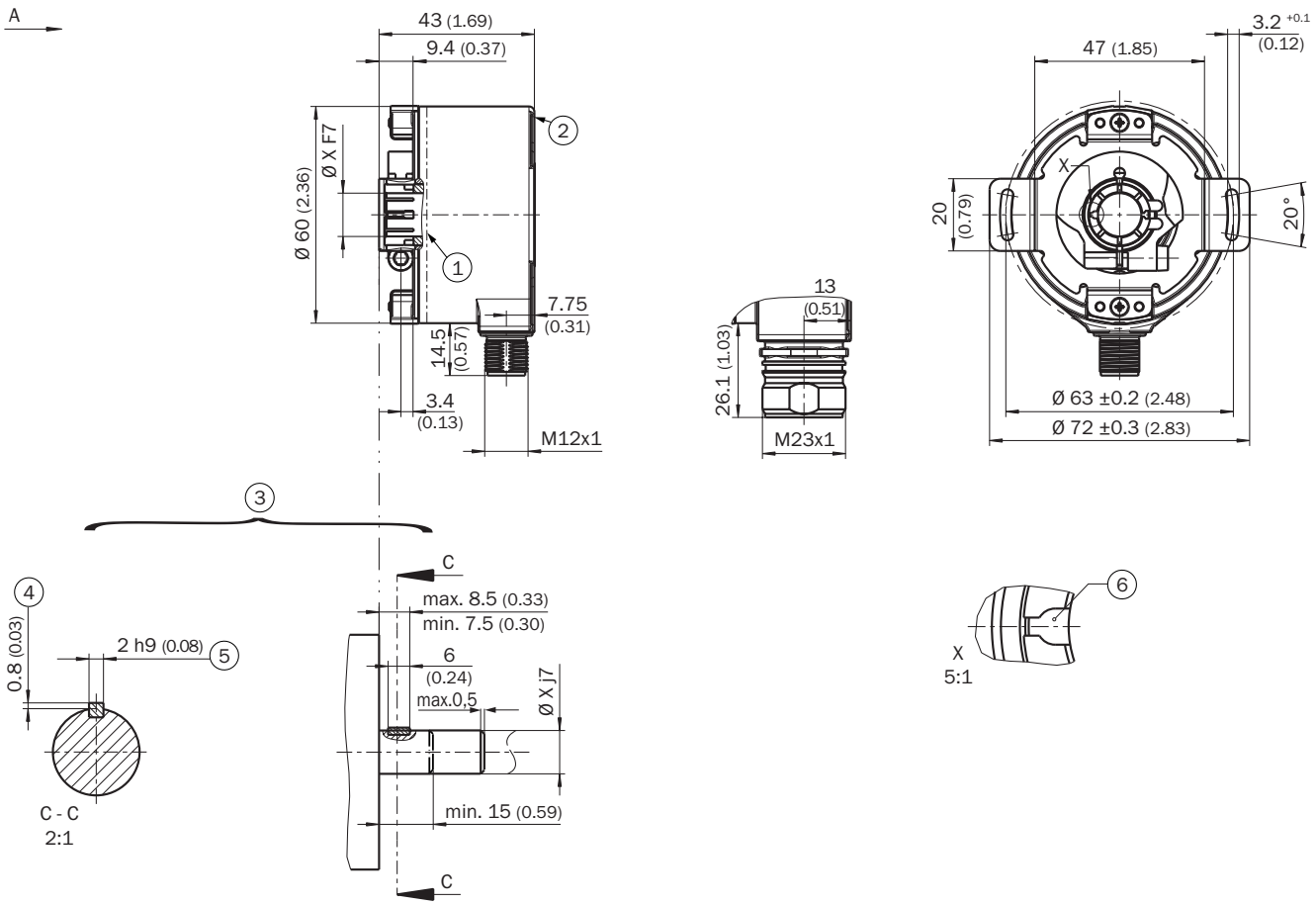

Dimensions in mm (inch)
General tolerances according to DIN ISO 2768-mk
① operating temperature measuring point (freely selectable, around the housing surface area in each case, approx. 3 mm away from flange)
② measuring point vibration (respectively at the housing face. approx. 3 mm away from the cover edge)

③ Attachment specifications
④ max. 0.4 at Ø 5/8"
⑤ feather key DIN 6885-A 2x2x6
⑥ feather key groove

Shaft diameter XF7	Shaft diameter xj7
6 mm	Provided by customer
8 mm	
3/8″	
10 mm	
12 mm	
1/2″	
14 mm	
15 mm	
5/8″	

PIN assignment

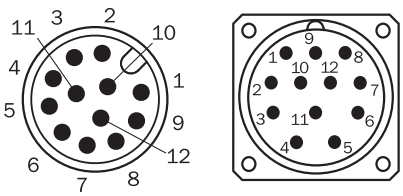

View of M23 and M12 male device connector on encoder

Recommended accessories

Other models and accessories ➜ www.sick.com/AFS_AFM60S_Pro

	Brief description	Type	part no.
Mounting systems			
	• **Description:** 1 M4x16 cylinder head screw and 1 2x2x6 feather key acc. to DIN 6885	BEF-MK-SE01	2073617

SICK AT A GLANCE

SICK is one of the leading manufacturers of intelligent sensors and sensor solutions for industrial applications. A unique range of products and services creates the perfect basis for controlling processes securely and efficiently, protecting individuals from accidents and preventing damage to the environment.

We have extensive experience in a wide range of industries and understand their processes and requirements. With intelligent sensors, we can deliver exactly what our customers need. In application centers in Europe, Asia and North America, system solutions are tested and optimized in accordance with customer specifications. All this makes us a reliable supplier and development partner.

Comprehensive services complete our offering: SICK LifeTime Services provide support throughout the machine life cycle and ensure safety and productivity.

For us, that is “Sensor Intelligence.”

WORLDWIDE PRESENCE:

Contacts and other locations –www.sick.com